smiths interconnect

# 0.100" Centers

## Standard Spring Probes

**Board Test Fixture Probes & Receptacles**

# Board Test Spring Probes

Smiths Interconnect offers a wide range of spring contact probes to meet your testing requirements and has long been recognized as the world's largest probe manufacturer. With over 60 different probe series that includes our standard Board Test Fixture Probes as well as our Specialty Test Probes, we provide a full portfolio designed for general purpose test on bare boards, loaded printed circuit boards, surface mount assemblies and other forms of test.

## MICRO SERIES PROBES

The Micro probe series range in pitch from 0.20" (0.51 mm) to 0.030" (0.76 mm) pitch and are typically between half an inch to an inch in length.

## ROTATOR PROBES

Ideal for non-clean and lead-free applications, this aggressive probe rotates 90° at the rated travel, virtually drilling through contaminants with a low spring force.

## STANDARD PROBES

Our standard probes range in pitch from 0.039" (1.00 mm) to 0.187" (4.75 mm). Within most series, there are multiple length and travel options, including more aggressive probes dimensionally equivalent to the standard probes.

## HIGH CURRENT PROBES

We offer two different high current probe designs in four different pitches. The SH series features a bias ball, which is the most aggressive biasing technique to aid in assuring a low and consistent resistance, cycle after cycle. The SHE Series features a bias spring, an effective biasing technique for many applications.

## DOUBLE-ENDED PROBES & RECEPTACLES

Double-ended probes feature both a top-side and bottom-side compliant plunger. Double-ended receptacles are available with a permanent bottom-side plunger and a replaceable probe on the top side. They are also available with both a top and bottom-side replaceable probe.

## SWITCH PROBES

A Switch Probe is a spring contact probe and receptacle that has two individual current paths. One current path is closed, the other is open and after a designated travel the second current path closes.

## LEAD FREE PROBES

The Lead Free probe series is based on our ICT Probe Series. The plunger material, plating and tip geometry have been optimized to provide less wear and contamination build-up while using a moderate spring force of 7 to 8 ounces.

## THERMOCOUPLE PROBES

The Thermocouple Probe is an ungrounded, thermally conductive probe used for the measurement of variations in temperature. We offer two Thermocouple Probes: Type T for up to 220°F, and Type K for up to 350°F.

## ICT PROBES

The ICT probe design features a bifurcated barrel with four separate fingers. The barrel is compliant and formed against the plunger, thus eliminating any gap between the plunger and barrel. ICT probes are more accurate and stable in resistance than standard designs.

## COAXIAL PROBES

Our Coax Probes provide a low noise, controlled impedance signal path with reliable, easy connect/disconnect options. Our designs include a spring-loaded signal probe and a spring-loaded shielding plunger for the ground.

# SS & GSS Series

## 0.100 (2.54) Centers

For RSS-100 Series Receptacles see pg. 9
For R-100/SS Series Receptacles see pg. 10
For R-SS/SS Series Receptacles see pg. 11

### SS Series

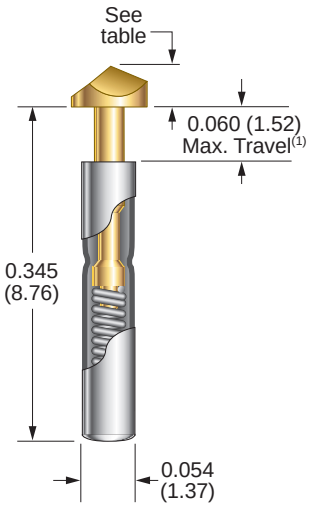


### GSS Series

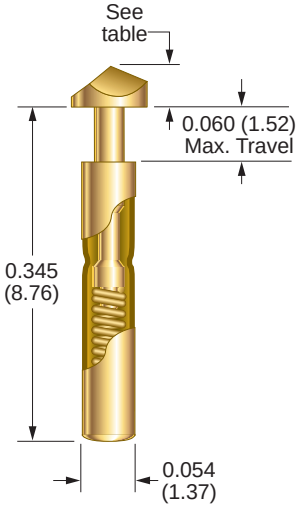


| Becu Tips | Diameter |
|---|---|
| 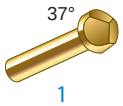 37° 1 | 0.077 (1.96) |
| 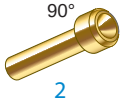 90° 2 | 0.077 (1.96) |
| 3 | 0.077 (1.96) 0.075 Radius |
| 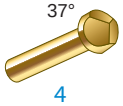 37° 4 | 0.062 (1.57) |
| 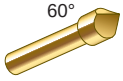 60° 8 | 0.075 (1.91) |
| 10 | 0.045 (1.14) |
| 90° 11 | 0.045 (1.14) |
| 18 | 0.075 (1.91) |
| 19 | 0.045 (1.14) |

| TIP | HEAD LENGTH | TIP | HEAD LENGTH |
|---|---|---|---|
| 1 | 0.040 (1.02) | 10 | 0.028 (0.71) |
| 2 | 0.028 (0.71) | 11 | 0.040 (1.02) |
| 3 | 0.028 (0.71) | 18 | 0.060 (1.52) |
| 4 | 0.040 (1.02) | 19 | 0.055 (1.40) |
| 8 | 0.080 (2.03) | | |

### Probe Specifications

| | |
|---|---|
| Minimum Centers | 0.100 (2.54) |
| Current Rating | Up to 3 Amps |
| Spring Force | 3.80 oz (108 g) or 7.00 oz (198 g) @ 0.050 (1.27) travel |
| Preload Force | 1.60 oz (45 g) *(3.80 oz spring/stainless steel)*<br>1.30 oz (37 g) *(7.00 oz spring/music wire)* |
| Typical Resistance | SS Series: < 65 mΩ<br>GSS Series: < 30 mΩ |
| Maximum Travel | 0.060 (1.52)(1) |
| Working Travel | 0.050 (1.27) |

### Materials

| | |
|---|---|
| Barrel | SS Series: Nickel/silver<br>GSS Series: Nickel/silver, gold plated |
| Spring | SS Series: Stainless steel or music wire<br>GSS Series: Stainless steel, or music wire, gold plated |
| Plunger | Beryllium copper, gold plated over nickel |

### How to Order

SS - 1 - 3.8 - G
1 2 3 4

| | | |
|---|---|---|
| 1 | Series | SS GSS |
| 2 | Tip Style | 1, 2, 3, 4, 8, 10, 11, 18, 19, |
| 3 | Spring Force | 3.8 oz 7 oz |
| 4 | Plunger Plating | G Gold |

1. Maximum travel for SS-8: 0.050 (1.27)
Dimensions are in inches (mm) | All specifications are subject to change

# S-2 Series

## 0.100 (2.54) Centers

For R-2 Series Receptacles see pg. 12

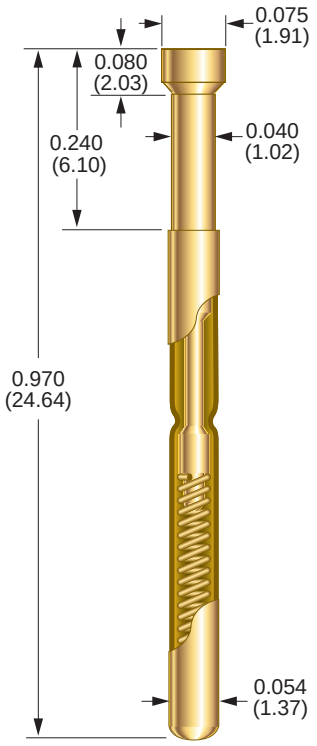


| Becu Tips | Diameter |
|---|---|
| 90° A | 0.075 (1.91) |
| 30° B | 0.040 (1.02) |
| C | 0.040 (1.02) |
| D | 0.050 (1.27) |
| 90° E | 0.075 (1.91) |
| F | 0.075 (1.91) |
| 90° G | 0.040 (1.02) |
| H | 0.075 (1.91) |
| J | 0.040 (1.02) |
| 45° K | 0.075 (1.91) |
| 60° T | 0.075 (1.91) |
| V | 0.060 (1.52) |
| X | 0.060 (1.52) |

## Probe Specifications

| | |
|---|---|
| Minimum Centers | 0.100 (2.54) |
| Current Rating | Up to 3 Amps |
| Spring Force | 4.00 oz (113 g), 7.00 oz (198 g), 8.30 oz (235 g), or 10.00 oz (283 g) @ 0.100 (2.54) travel |
| Preload Force | 1.60 oz (45 g) *(4.00 oz spring/BeCu)*<br>2.90 oz (82 g) *(7.00 oz spring/stainless steel)*<br>3.30 oz (93 g) *(8.30 oz spring/music wire)*<br>3.90 oz (110 g) *(10.00 oz spring/music wire)* |
| Typical Resistance | < 35 mΩ |
| Maximum Travel | 0.160 (4.06) |
| Working Travel | 0.100 (2.54) |

## Materials

| | |
|---|---|
| Barrel | Nickel/silver, gold plated |
| Spring | Beryllium copper, precious metal plated, music wire, or stainless steel, gold plated |
| Plunger | Beryllium copper, gold plated over nickel, or Duralloy™ |

## How to Order

S - 2 - A - 4 - G
1 2 3 4 5

| | | |
|---|---|---|
| 1 | Series | S |
| 2 | Size | 2 |
| 3 | Tip Style | A, B, C, D, E, F, G, H, J, K, T, V, X, |
| 4 | Spring Force | 4 oz; 7 oz; 8.3 oz; 10 oz |
| 5 | Plunger Plating | G Gold; D Duralloy™ |

# ICT-100 & S-100 Series

## 0.100 (2.54) Centers

For R-100/SS Series Receptacles see pg. 10 For R-100 Series Receptacles see pg. 13
For R-100-J-DE Wireless Series Receptacles see pg. 14

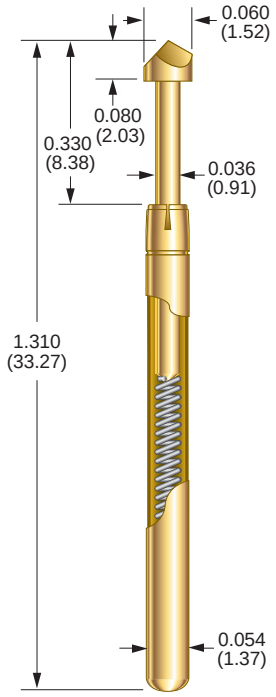


| Steel Tips | Diameter |
|---|---|
| 30° B | 0.036 (0.91) |
| 90° M | 0.036 (0.91) |
| NT | 0.055 (1.40) |
| 10° SP | 0.036 (0.91) |
| 20° SWS | 0.036 (0.91) |
| 60° U | 0.036 (0.91) |
| UR | 0.020 (0.51) 0.036 (0.91) |
| WO | 0.050 (1.27) |
| Y | 0.055 (1.40) |

| BeCu Tips | Diameter |
|---|---|
| 90° A | 0.060 (1.52) |
| 30° B | 0.036 (0.91) |
| D | 0.050 (1.27) |
| F | 0.060 (1.52) |
| H | 0.060 (1.52) |
| HK | 0.075 (1.91) |
| HL | 0.093 (2.36) |
| HSC | 0.068 (1.73) 0.075 (1.91) 0.090 insulator dia. |
| J | 0.036 (0.91) |
| 0.100 (2.54) JS | 0.025 (0.64) 0.036 (0.91) |
| 45° K | 0.060 (1.52) |
| 60° T | 0.060 (1.52) |
| V | 0.060 (1.52) |
| V8 | 0.060 (1.52) 8 Pts. |
| W | 0.050 (1.27) |

## Probe Specifications

| | |
|---|---|
| Minimum Centers | 0.100 (2.54) |
| Current Rating | Up to 3 Amps |
| Spring Force | 3.50 oz (99 g)(1), 5.50 oz (156 g), 6.70 oz (190 g), 8.00 oz (227 g), 10.00 oz (283 g), or 17.00 oz (483 g) @ 0.170 (4.32) travel |
| Preload Force | 1.50 oz (43 g) *(3.50(1) oz spring/BeCu)*<br>2.40 oz (68 g) *(5.50 oz spring/music wire(2))*<br>2.80 oz (80 g) *(6.70 oz spring/stainless steel)*<br>3.30 oz (94 g) *(8.00 oz spring/music wire(2))*<br>3.70 oz (105 g) *(10.00 oz spring/music wire)*<br>6.80 oz (193 g) *(17.00 oz spring/music wire)* |
| Typical Resistance | < 8 mΩ |
| Maximum Travel | 0.250 (6.35) |
| Working Travel | 0.170 (4.32) |

## Materials

| | |
|---|---|
| Barrel | ICT Series: Gold plated I.D. and O.D.<br>S Series: Gold plated I.D. and O.D. |
| Spring | Beryllium copper or music wire, nickel plated, or stainless steel |
| Plunger | Beryllium copper, or steel, gold plated over nickel |

## How to Order

ICT - 100 - T - 5.5 - G - S
1 2 3 4 5 6

| | | |
|---|---|---|
| 1 | Series | ICT(3) S |
| 2 | Size | 100 |
| 3 | Tip Style | A, B, D, F, H, HK, HL, HSC, J, JS, K, M, NT, SP, SWS, T, U, UR, V, V8, W, WO, Y |
| 4 | Spring Force | 3.5 oz(1) 5.5 oz 6.7 oz<br>8 oz 10 oz 17 oz |
| 5 | Plunger Plating | G Gold |
| 6 | Steel Plunger Option | S Steel |

1. 3.50 oz. spring for S-100 Series only
2. BeCu instead of music wire for S Series
3. High performance

Dimensions are in inches (mm) | All specifications are subject to change

# Lead Free ICT-100 Series

## 0.100 (2.54) Centers

For R-100 Series Receptacles see pg. 13
For R-100-J-DE Wireless Series Receptacles see pg. 14

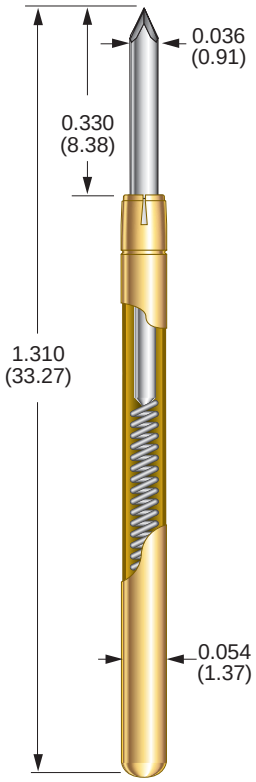


| Steel Tip | Diameter |
|---|---|
| 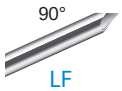  LF | 0.036 (0.91) |

### Probe Specifications

| | |
|---|---|
| Minimum Centers | 0.100 (2.54) |
| Current Rating | Up to 3 Amps |
| Spring Force | 8.00 oz (227 g) @ 0.170 (4.32) travel |
| Typical Resistance | < 30 mΩ *(against lead free surface)* |
| Maximum Travel | 0.250 (6.35) |
| Working Travel | 0.170 (4.32) |

### Materials

| | |
|---|---|
| Barrel | G2 |
| Spring | Music wire, nickel plated |
| Plunger | Steel, Duralloy™ plated |

### How to Order

| ICT | - | 100 | - | LF | - | 8 | - | D | - | S |
|---|---|---|---|---|---|---|---|---|---|---|
| 1 | | 2 | | 3 | | 4 | | 5 | | 6 |

| | | |
|---|---|---|
| 1 | Series | ICT |
| 2 | Size | 100 |
| 3 | Tip Style | LF |
| 4 | Spring Force | 8 oz |
| 5 | Plunger Plating | D Duralloy™ |
| 6 | Steel Plunger Option | S Steel |

# S-100 Rotator Series

## 0.100 (2.54) Centers

For R-100 Series Receptacles see pg. 13

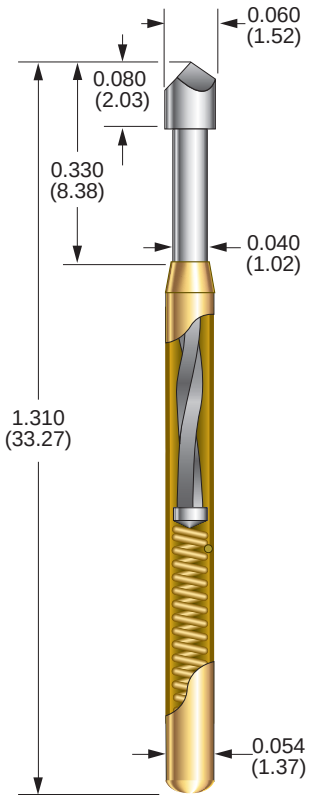


| BeCu Tips | Diameter |
|---|---|
| 90° LM | 0.060 (1.52) |
| 60° S | 0.040 (1.02) |
| 60° T | 0.060 (1.52) |

## Probe Specifications

| | |
|---|---|
| Minimum Centers | 0.100 (2.54) |
| Current Rating | Up to 3 Amps |
| Spring Force | 4.00 oz (113 g), 5.50 oz (156 g), 6.70 oz (190 g), 8.00 oz (227 g), or 10.00 oz (283 g) @ 0.170 (4.32) travel |
| Preload Force | 1.50 oz (43 g) *(4.00 oz spring/stainless steel)*<br>2.00 oz (57 g) *(5.50 oz spring/stainless steel)*<br>1.50 oz (43 g) *(6.70 oz spring/stainless steel)*<br>2.80 oz (80 g) *(8.00 oz spring/music wire)*<br>1.80 oz (51 g) *(10.00 oz spring/music wire)* |
| Typical Resistance | < 50 mΩ |
| Maximum Travel | 0.220 (5.59) |
| Working Travel | 0.170 (4.32) |
| Rotation | 90° @ 0.170 (4.32) travel |

## Materials

| | |
|---|---|
| Barrel | G2 |
| Spring | Music wire, or stainless steel, gold plated |
| Plunger | Beryllium copper, Duralloy™ plated |

## How to Order

S - 100 - T - 4 - RT
1 2 3 4 5

| | | |
|---|---|---|
| 1 | Series | S |
| 2 | Size | 100 |
| 3 | Tip Style | LM, S, T |
| 4 | Spring Force | 4 oz, 5.5 oz, 6.7 oz, 8 oz, 10 oz |
| 5 | Rotator | RT |

Dimensions are in inches (mm) | All specifications are subject to change

# ICT-L100 Series

## 0.100 (2.54) Centers

For R-100/SS Series Receptacles see pg. 10
For R-100 Series Receptacles see pg. 13

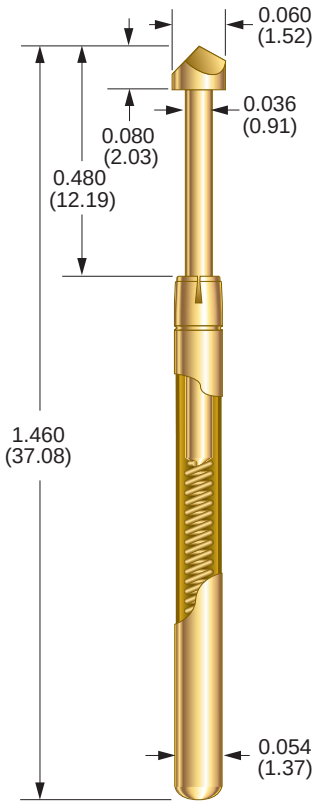


| Becu Tips | Diameter |
|---|---|
| 90° A | 0.060 (1.52) |
| H | 0.060 (1.52) |
| J | 0.036 (0.91) |
| 60° T | 0.060 (1.52) |

| Steel Tip | Diameter |
|---|---|
| 10° SP | 0.036 (0.91) |

### Probe Specifications

| | |
|---|---|
| Minimum Centers | 0.100 (2.54) |
| Current Rating | Up to 3 Amps |
| Spring Force | 5.70 oz (162 g) @ 0.317 (8.05) travel |
| Preload Force | 1.80 oz (51 g) |
| Typical Resistance | < 10 mΩ |
| Maximum Travel | 0.400 (10.16) |
| Working Travel | 0.317 (8.05) |

### Materials

| | |
|---|---|
| Barrel | G2 |
| Spring | Music wire, gold plated over nickel |
| Plunger | Beryllium copper, or steel, gold plated over nickel |

### How to Order

| ICT | - | L100 | - | T | - | 5.7 | - | G | - | S |
|---|---|---|---|---|---|---|---|---|---|---|
| 1 | | 2 | | 3 | | 4 | | 5 | | 6 |

| | | |
|---|---|---|
| 1 | Series | ICT |
| 2 | Size | L100 |
| 3 | Tip Style | A, H, J, SP, T |
| 4 | Spring Force | 5.7 oz |
| 5 | Plunger Plating | G Gold |
| 6 | Steel Plunger Option | S Steel |

Dimensions are in inches (mm) | All specifications are subject to change

# RSS-100 Series

## 0.100 (2.54) Centers

For SS/GSS Series Probes see pg. 3

| Part Number | Style/Termination | Receptacle or Terminal Length | Probe/Receptacle Combined Length | Notes |
|---|---|---|---|---|
| RSS-100-CR | Crimp | 0.475 (12.07) | 0.550 (13.97)(1) | — |
| RSS-100-NT | No Tail | 0.402 (10.21) | 0.462 (11.73)(1) | — |
| RSS-100-RP | Round Post | 0.625 (15.88) | 0.685 (17.40)(1) | 0.220 post length – 0.028 dia. |
| RSS-100-WW | Wire Wrap | 0.822 (20.88) | 0.882 (22.40)(1) | 0.420 post length – 0.025 dia. |
| RSS-100-PW-12-1 | Preattached Wire(2) | 0.475 (12.07) | 0.550 (13.97)(1) | 12" wire length, 1" strip length |
| RSS-100-PW-36-1 | Preattached Wire(2) | 0.475 (12.07) | 0.550 (13.97)(1) | 36" wire length, 1" strip length |

### RSS-100-CR

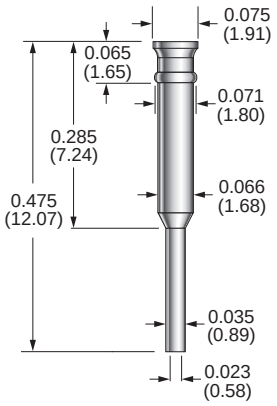


### RSS-100-NT

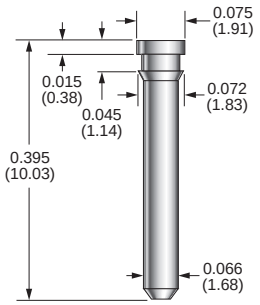


### Probe Extension

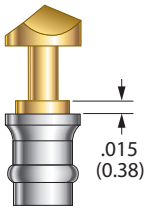


See chart for head length

| TIP | HEAD LENGTH | TIP | HEAD LENGTH |
|---|---|---|---|
| 1 | 0.040 (1.02) | 10 | 0.028 (0.71) |
| 2 | 0.028 (0.71) | 11 | 0.040 (1.02) |
| 3 | 0.028 (0.71) | 18 | 0.060 (1.52) |
| 4 | 0.040 (1.02) | 19 | 0.055 (1.40) |
| 5 | 0.080 (2.03) | | |

### RSS-100-RP

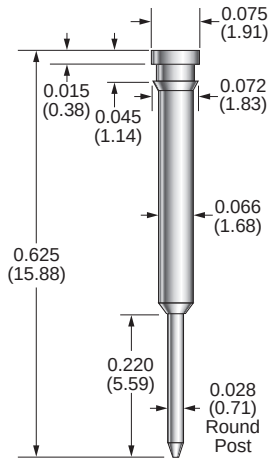


### RSS-100-WW

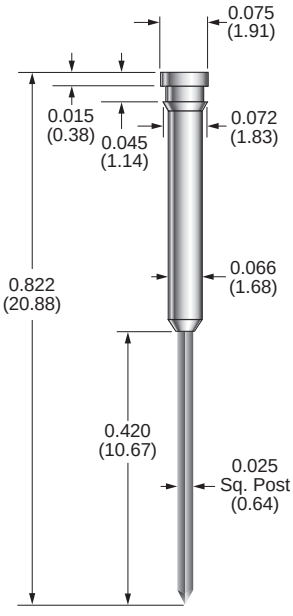


1. Plus head length per tip style – see chart
2. Wire length 36" with a 1" strip length, 12" & 36" standard, blue solid conductor Kynar wire

Dimensions are in inches (mm) | All specifications are subject to change

### Probe Specifications

| | |
|---|---|
| Minimum Centers | 0.100 (2.54) |
| Drill Size | #50 |
| Mounting Hole Size | 0.068/0.070 (1.73/1.78) |
| Recommended Wire | 28-30 gage |
| Materials | Nickel/silver |

### Tools

| | |
|---|---|
| Crimping Pliers | CP-SS-100 *(for 28-30 gage solid conductor)* |
| Insertion Tool | RT-SS-100 |

### How to Order

RSS - 100 - WW - G

1 2 3 4

| | | | | |
|---|---|---|---|---|
| 1 | Series | RSS | | |
| 2 | Size | 100 | | |
| 3 | Termination | CR | Crimp | NT No Tail |
| | | RP | Round Post | WW Wire Wrap |
| | | PW-12-1 | Preattached wire 12", 1" strip length(1) | |
| | | PW-36-1 | Preattached wire 36", 1" strip length(1) | |
| 4 | Plating Option | G | Gold | |

# R-100/SS Series

## 0.100 (2.54) Centers

For ICT-L100 Series Probes see pg. 8 *(for top end of receptacle)*
For ICT-100/S-100 Series Probes see pg. 5 *(for top end of receptacle)*
For SS/GSS Series Probes see pg. 3 *(for bottom end of receptacle)*

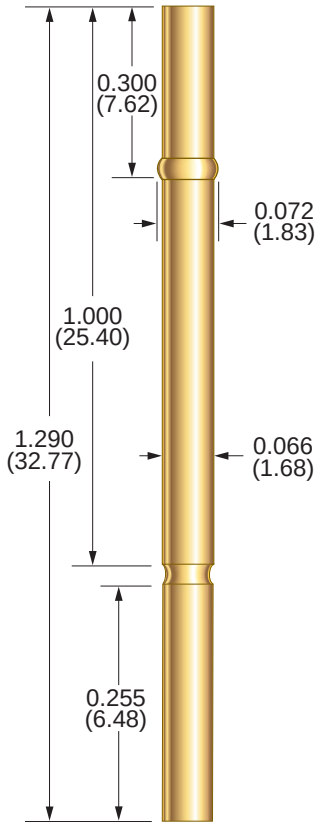


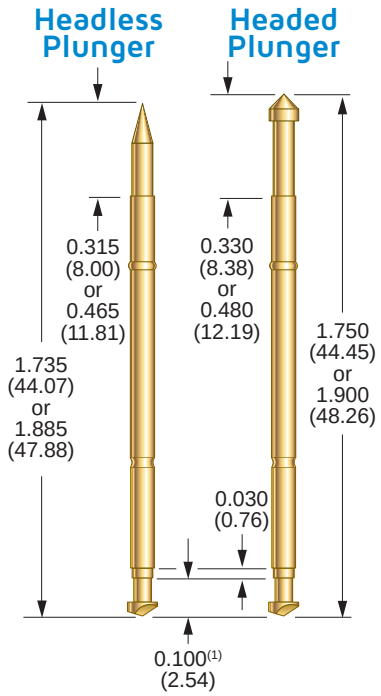


### Probe Specifications

| | |
|---|---|
| Minimum Centers | 0.100 (2.54) |
| Drill Size | #50 |
| Mounting Hole Size | 0.068/0.070 (1.73/1.78) |
| Materials | Nickel/silver, gold plated |

### Tools

| | |
|---|---|
| Insertion Tool | RT-100 |

### How to Order

R - 1 0 0 / S S
1

| | |
|---|---|
| 1 Series | R - 1 0 0 / S S |

1. For plunger with 0.040 (1.02) tip length
Dimensions are in inches (mm) | All specifications are subject to change

# R-SS/SS Series

## 0.100 (2.54) Centers

For SS/GSS Series Probes see pg. 3
(Receptacle houses an SS-100 or GSS-100 on each end)

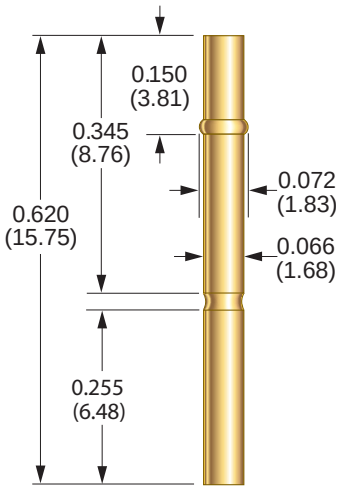


### Headed Plunger

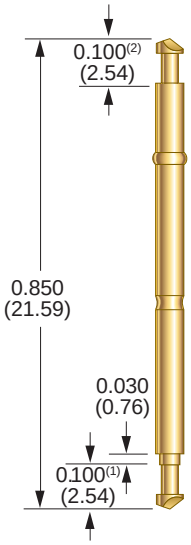


### Probe Specifications

| | |
|---|---|
| Minimum Centers | 0.100 (2.54) |
| Drill Size | #50 |
| Mounting Hole Size | 0.068/0.070 (1.73/1.78) |
| Materials | Nickel/silver, gold plated |

### Tools

| | |
|---|---|
| Insertion Tool | RT-100 |

### How to Order

R - S S / S S
1

| | |
|---|---|
| 1 Series | R - S S / S S |

1. For plunger with 0.040 (1.02) tip length
2. Headed plunger only this end

Dimensions are in inches (mm) | All specifications are subject to change

# R-2 Series

## 0.100 (2.54) Centers

For S-2 Series Probes see pg. 4

| Part Number | Style/Termination | Receptacle or Terminal Length | Probe/Receptacle Combined Length | Notes |
|---|---|---|---|---|
| R-2-CR | Crimp | 0.930 (23.62) | 1.170 (29.72) | — |
| R-2-SC | Solder Cup | 0.930 (23.62) | 1.170 (29.72) | — |
| R-2-RP | Round Post | 1.305 (31.15) | 1.545 (39.24) | 0.375 post length – 0.025 dia. |
| R-2-WW-429 | Wire Wrap | 1.359 (34.52) | 1.599 (40.61) | 0.429 post length – 0.025 dia. |

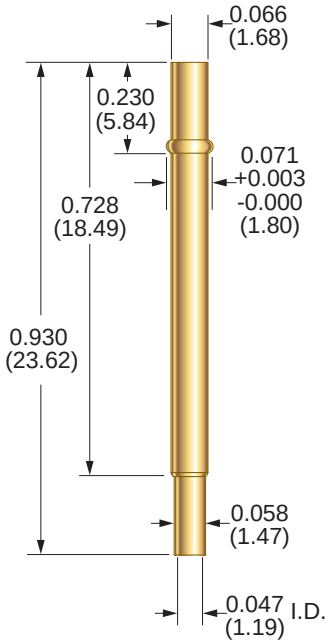


### Probe Specifications

| | |
|---|---|
| Minimum Centers | 0.100 (2.54) |
| Drill Size | #50 |
| Mounting Hole Size | 0.068/0.070 (1.73/1.78) |
| Recommended Wire | 22-26 gage |
| Materials | Nickel/silver, gold plated, gold plated post |

### Tools

| | |
|---|---|
| Crimping Pliers | CP-2 *(for 22-26 gage solid conductor)* |
| Insertion Tool | RT-100 |

### How to Order

R - 2 - WW - 429

1 2 3

| | | |
|---|---|---|
| 1 | Series | R |
| 2 | Size | 2 |
| 3 | Termination | CR Crimp; SC Solder Cup |
| | | RP Round Post |
| | | WW-429 Wire wrap 0.429 post length |

# R-100 Series

## 0.100 (2.54) Centers

For ICT-100/S-100 Series Probes see pg. 5
For S-100 Rotator Series Probes see pg. 7
For ICT-100 Lead Free Series Probes see pg. 6
For ICT-L100 Series Probes see pg. 8

| Part Number | Style/Termination | Receptacle or Terminal Length | Probe/Receptacle Combined Length | | Notes |
|---|---|---|---|---|---|
| | | | ICT-100/S-100 | ICT-L100 | |
| R-100-CR | Crimp | 1.165 (29.59) | 1.495 (37.97) | 1.645 (41.78) | — |
| R-100-SC | Solder Cup | 1.165 (29.59) | 1.495 (37.97) | 1.645 (41.78) | — |
| R-100-RP | Round Post | 1.540 (39.12) | 1.870 (47.50) | 2.020 (51.31) | 0.375 post length – 0.025 dia. |
| R-100-WW-429 | Wire Wrap | 1.594 (40.49) | 1.924 (48.87) | 2.074 (52.68) | 0.429 post length – 0.025 dia. |

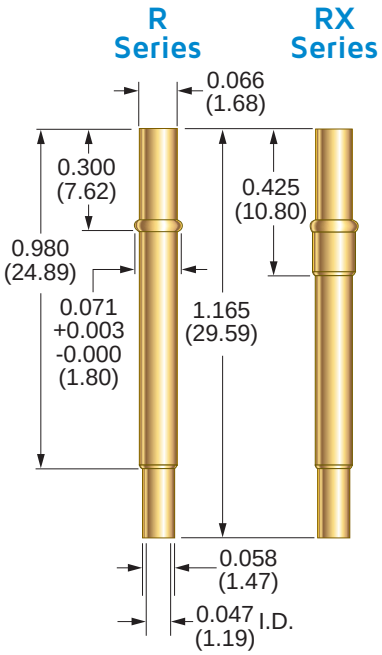


## Probe Specifications

| | |
|---|---|
| Minimum Centers | 0.100 (2.54) |
| Drill Size | #50 |
| Mounting Hole Size | 0.068/0.070 (1.73/1.78) |
| Recommended Wire | 22-26 gage |
| Materials | Nickel/silver, gold plated, gold plated post |

## Tools

| | |
|---|---|
| Crimping Pliers | CP-2 *(for 22-26 gage solid conductor)* |
| Insertion Tool | RT-100 |

## How to Order

R - 100 - WW - 429
1 2 3

| | | | |
|---|---|---|---|
| 1 | Series | R | RX (1) |
| 2 | Size | 100 | |
| 3 | Termination | CR Crimp | SC Solder Cup |
| | | RP Round Post | |
| | | WW - 429 Wire wrap 0.429 post length | |

1. Improved pointing accuracy

Dimensions are in inches (mm) | All specifications are subject to change

# Global
## Support

## Americas

- Kansas City, KS
  +1 913 342 5544
  info.us@smithsinterconnect.com
- Tampa, FL
  + 1 813 901 7200
  info.tampa@smithsinterconnectinc.com
- Milpitas, CA
  +1 408 957 9607 x-1125
  info.us@smithsinterconnect.com
- Kirkland, QC, Canada
  +1 514 842 5179
  info.us@smithsinterconnect.com
- Salisbury, MD
  +1 800 780 2169
  info.us@smithsinterconnect.com

## Europe

- Deggendorf, Germany
  +49 991 250 120
  info.de@smithsinterconnect.com
- Rouen, France
  +33 2 3296 9176
  info.fr@smithsinterconnect.com
- Dundee, UK
  +44 1382 427 200
  info.dundee@smithsinterconnect.com
- Genova, Italy
  +39 0 10 60361
  info.it@smithsinterconnect.com

## Asia

- Bangalore, India
  +91 080 4241 0529
  info.in@smithsinterconnect.com
- Singapore
  +65 6846 1655
  info.asia@smithsinterconnect.com
- Mianyang, China
  +86 816 231 5566
  HSICSR@hf-smiths.com
- Suzhou, China
  +86 512 6273 1188
  info.asia@smithsinterconnect.com
- Shanghai, China
  +86 21 2283 8008
  info.asia@smithsinterconnect.com

more > smithsinterconnect.com

Copyright© 2022 Smiths Interconnect | All rights reserved | Version 2.0
The information contained within this document is subject at all times to applicable Export Control regulations and legal requirements