All Stainless Steel Transducer/Transmitter Multimedia Compatibility

High-Performance Silicon Technology

Imperial Model

0-1 to 0-10,000 psi
0-0.07 to 0-690 bar
100 mV, 0 to 5 V, 0 to 10 V,
and 4 to 20 mA Outputs

PX309 Series

NIST Standard

- **1, 2 & 5 psi Low Pressure Ranges!**
- **All Stainless Steel Construction**
- **Gage, Absolute, Compound Gage or Vacuum Pressure**
- **Rugged Solid State Design**
- **High Stability, Low Drift**
- **0.25% Static Accuracy**
- **IP65 Protection Class**
- **Stocked for Fast Delivery**

We provide a complete range of services—from product inception, through design and prototypes, to manufacturing and testing. Our application engineers work closely with our customers to **customize**, **design** or create entirely **new products**. Call us—whether you're an OEM, manufacturer, or end user.

New! Vacuum and Compound Range Models

PX319-100GV

mini DIN style.

Cable style.

PX309-100GV.

Twist-lock style.

PX329-100GV

PX359-100GV

M12 connector style

All models shown smaller than actual size.

Rugged, General Purpose Transducer

Common Specifications for 100 mV, 0 to 5 Vdc, and 0 to 10 Vdc, 4 to 20 mA Outputs

- **1, 2 & 5 psi Low Pressure Ranges!**
- **All Stainless Steel Construction**
- **Gage or Absolute Pressure**
- **Rugged Solid State Design**
- **High Stability, Low Drift**
- **0.25% Static Accuracy**
- **IP 65 Protection Class**

Omega's PX309 Series models below 100 psi use a high-accuracy silicon sensor protected by an oil-filled stainless steel diaphragm. Units 100 psi and above use silicon strain gages molecularly bonded to the stainless steel diaphragm.

Common Specifications

Ranges: -15 to 50 psig, 0 to 1000 psia, 100 to 10,000 psig

Accuracy (Combined Linearity, Hysteresis and Repeatability): ±0.25% BSL, max

Minimum Resistance Between Transducer Body and Any Wire: 1M Ω @ 25 Vdc

Calibration: In vertical direction with fitting down, Compound range units are calibrated from Vac to FSO

Pressure Cycles: 10 million, minimum

Pressure Overload: -15 to 50 psig and 0 to 1000 psia: 3 times rated pressure or 20 psi whichever is greater, 100 to 10,000 psig: 2 times rated pressure

Burst Pressure: -15 to 50 psig and 0 to 1000 psia: 4 times rated pressure or 25 psi whichever is greater, 100 to 10,000 psig: 5 times rated pressure

Long Term Stability (1 Year): ±0.25% of FS, typical

Operating Temperature: -40 to 85°C (-40 to 185°F)

Pressure Port: ¼-18 MNPT

Pressure Port Material: -15 to 50 psig and 0 to 1000 psia: 316 SS, 100 to 10,000 psig: SS 316 or 17-4

Bandwidth: DC to 1 kHz (typical)

CE: Compliant

Shock: 50 g, 11 ms half-sine

Vibration: ±20 g

Response Time: <1 millisecond

Weight:
PX309/PX319/PX329/PX359: <90 grams

IP Rating: IP65

RoHS: Compliant

Order a snubber to protect your pressure transducer!

PS-4G, shown actual size.

Snubbers protect sensors from fluid hammers/spikes.

mV Output Wiring			
Wiring	**Cable**	**M12 and mini DIN**	**Twist-Lock**
Excitation (+)	Red	Pin 1	Pin A
Output (+)	White	Pin 3	Pin C
Output (-)	Green	Pin 4	Pin D
Excitation (-)	Black	Pin 2	Pin B
Spare	–	–	Pin E
Vent	–	–	Pin F

5 and 10 Vdc Output Wiring			
Wiring	**Cable**	**M12 and mini DIN**	**Twist-Lock**
Excitation (+)	Red	Pin 1	Pin A
Excitation (-)	Black	Pin 2	Pin B
Output (+)	White	Pin 3	Pin C
N/C†	–	Pin 4	Pin D
Spare	–	–	Pin E
Vent	–	–	Pin F

mA Output Wiring			
Wiring	**Cable**	**M12 and mini DIN**	**Twist-Lock**
Supply (+)	Red	Pin 1	Pin A
Supply (-)	Black	Pin 2	Pin B
N/C†	–	Pin 3	Pin C
N/C†	–	Pin 4	Pin D
Spare	–	–	Pin E
Vent	–	–	Pin F

† N/C: Do not connect any wires to this pin.

Dimensions: mm (inch)
ø = diameter

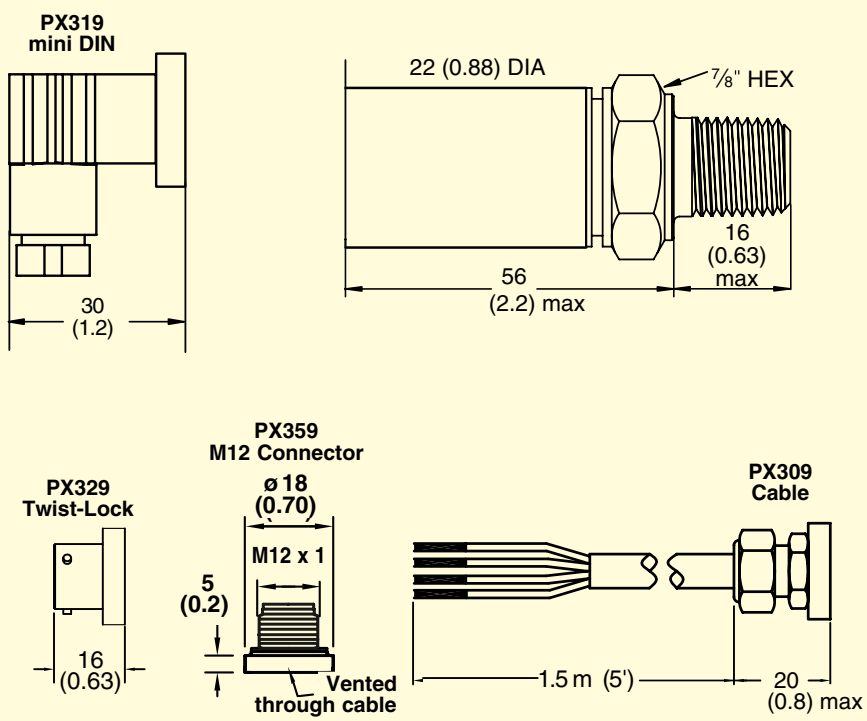

How to Order PX309 Series
with 100 mV Outputs

100 mV Output
0-1 to 0-10,000 psi
0-70 mbar to 0-690 bar

PX319-050GV, mini DIN connector included, shown smaller than actual size.

PX309 Series

NIST CE

Standard

100 mV Output Specifications
(In Addition to Common Specifications on page 2)

Setting Accuracy Zero and Span:
±2% FS (±4% FS for 1 and 2 psi)

Supply Voltage:
-15 to 50 psig and 0 to 1000 psia: 10 Vdc, 100 to 10,000 psig: 5 Vdc typical

100 mV Outputs		
Range	Output	Excitation*
200psia	66.7 mV	10 Vdc
1 psig	20 mV	10 Vdc
2 psig	40 mV	10 Vdc
5 to 50 psig	100 mV	10 Vdc
100 to 10,000 psig	100 mV	5 Vdc
0 to -15 psig	0 to 100 mV	10 Vdc
-15 to 0 to +15 psig	-100 to 0 to +100 mV	10 Vdc
-15 to 30/50 psig	0 to 100 mV	10 Vdc
-15 to 100/150 psig	0 to 100 mV	5 Vdc

** Ratiometric Excitation Range: 2 to 10 or 1 to 5 Vdc*

Input Impedance: 3k Ohms Min
Output Impedance: 3k Ohms Min

Zero Shift:
-15 to 50 psig and 0 to 1000 psia: ±0.03%/°C (0 to 5 psig/psia is ±0.06%/°C, 0 to 2 psig is ±0.08%/°C, 0 to 1 psig is ±0.1%/°C). 100 to 10,000 psig: ±2% over compensated range ref 25°C

Span Shift:
-15 to 50 psig and 0 to 1000 psia: ±0.03%/°C (0 to 5 psig/psia is ±0.04%/°C, 0 to 2 psig is ±0.05%/°C, 0 to 1 psig is ±0.06%/°C). 100 to 10,000 psig: ±2% over compensated range ref 25°C

Compensated Temperature:
-15 to 50 psig and 0 to 1000 psia: 0 to 50°C, 100 to 10,000 psig: 0 to 55°C

Metric Versions of PX309 also available from Omega. Please see PXM309 series.

To Order

Range psi	Range bar	1.5 m Cable Connection	mini DIN Connection	Twist-Lock Connection	M12 Connection
Absolute Pressure					
0 to 5	0 to 0.34	**PX309-005AV**	**PX319-005AV**	**PX329-005AV**	**PX359-005AV**
0 to 15	0 to 1	**PX309-015AV**	**PX319-015AV**	**PX329-015AV**	**PX359-015AV**
0 to 30	0 to 2.1	**PX309-030AV**	**PX319-030AV**	**PX329-030AV**	**PX359-030AV**
0 to 50	0 to 3.4	**PX309-050AV**	**PX319-050AV**	**PX329-050AV**	**PX359-050AV**
0 to 100	0 to 6.9	**PX309-100AV**	**PX319-100AV**	**PX329-100AV**	**PX359-100AV**
0 to 200	0 to 14	**PX309-200AV**	**PX319-200AV**	**PX329-200AV**	**PX359-200AV**
0 to 300	0 to 21	**PX309-300AV**	**PX319-300AV**	**PX329-300AV**	**PX359-300AV**
0 to 500	0 to 34	**PX309-500AV**	**PX319-500AV**	**PX329-500AV**	**PX359-500AV**
0 to 1000	0 to 69	**PX309-1KAV**	**PX319-1KAV**	**PX329-1KAV**	**PX359-1KAV**
Gage Pressure					
0 to 1	0 to 0.07	**PX309-001GV**	**PX319-001GV**	**PX329-001GV**	**PX359-001GV**
0 to 2	0 to 0.14	**PX309-002GV**	**PX319-002GV**	**PX329-002GV**	**PX359-002GV**
0 to 5	0 to 0.34	**PX309-005GV**	**PX319-005GV**	**PX329-005GV**	**PX359-005GV**
0 to 15	0 to 1	**PX309-015GV**	**PX319-015GV**	**PX329-015GV**	**PX359-015GV**
0 to 30	0 to 2.1	**PX309-030GV**	**PX319-030GV**	**PX329-030GV**	**PX359-030GV**
0 to 50	0 to 3.4	**PX309-050GV**	**PX319-050GV**	**PX329-050GV**	**PX359-050GV**
0 to 100	0 to 6.9	**PX309-100GV**	**PX319-100GV**	**PX329-100GV**	**PX359-100GV**
0 to 150	0 to 10	**PX309-150GV**	**PX319-150GV**	**PX329-150GV**	**PX359-150GV**
0 to 200	0 to 14	**PX309-200GV**	**PX319-200GV**	**PX329-200GV**	**PX359-200GV**
0 to 300	0 to 21	**PX309-300GV**	**PX319-300GV**	**PX329-300GV**	**PX359-300GV**
0 to 500	0 to 34	**PX309-500GV**	**PX319-500GV**	**PX329-500GV**	**PX359-500GV**
0 to 1000	0 to 69	**PX309-1KGV**	**PX319-1KGV**	**PX329-1KGV**	**PX359-1KGV**
0 to 2000	0 to 138	**PX309-2KGV**	**PX319-2KGV**	**PX329-2KGV**	**PX359-2KGV**
0 to 3000	0 to 207	**PX309-3KGV**	**PX319-3KGV**	**PX329-3KGV**	**PX359-3KGV**
0 to 5000	0 to 345	**PX309-5KGV**	**PX319-5KGV**	**PX329-5KGV**	**PX359-5KGV**
0 to 7500	0 to 517	**PX309-7.5KGV**	**PX319-7.5KGV**	**PX329-7.5KGV**	**PX359-7.5KGV**
0 to 10,000	0 to 690	**PX309-10KGV**	**PX319-10KGV**	**PX329-10KGV**	**PX359-10KGV**
Vacuum and Compound Gage Pressure					
-0 to -15	—	**PX309-015VV**	**PX319-015VV**	**PX329-015VV**	**PX359-015VV**
-15 to 0 to +15	—	**PX309-015CGV**	**PX319-015CGV**	**PX329-015CGV**	**PX359-015CGV**
-15 to 30	-1.03 to 2.1	**PX309-V030GV**	**PX319-V030GV**	**PX329-V030GV**	**PX359-V030GV**
-15 to 50	-1.03 to 3.4	**PX309-V050GV**	**PX319-V050GV**	**PX329-V050GV**	**PX359-V050GV**
-15 to 100	-1.03 to 6.9	**PX309-V100GV**	**PX319-V100GV**	**PX329-V100GV**	**PX359-V100GV**
-15 to 150	-1.03 to 10.3	**PX309-V150GV**	**PX319-V150GV**	**PX329-V150GV**	**PX359-V150GV**

Comes complete with 5-point NIST-traceable calibration.

Notes: *1. Units 100 psig and above may be subjected to vacuum on the pressure port without damage. 2. For alternative performance specifications to suit your application, contact Engineering.*

Ordering Examples: PX309-100GV, *100 psi gage pressure transducer with 100 mV output at 5 Vdc excitation and 1.5 m cable termination.* ***PX319-015AV,*** *15 psi absolute pressure transducer with 100 mV output @ 10 Vdc excitation and mini DIN termination.*

PX329-3KGV, *3000 psi gage pressure transducer with 100 mV output @ 5 Vdc excitation and twist-lock 6 pin connector termination. Mating connector sold separately, order* ***PT06V-10-6S-R,*** *Consult Sales for OEM pricing.*

How to Order PX309 Series

with 0 to 5 Vdc Output

0 to 5 Vdc Output
0-1 to 0-10,000 psi
0-70 mbar to 0-690 bar

PX329-015G5V shown smaller than actual size.

Twist-lock style.

PX309 Series

Standard

5V Output Specifications

(In Addition to Common Specifications on page 2)

Total Error Band (Includes Linearity, Hyesteresis, Repeatability, Thermal Hysteresis and Thermal Errors, Not Including Zero and Span Setting Accuracy): ±1.0% (5 psig/psia is ±1.5%, 2 psig is 3.0% and 1 psig is 4.5%)

Supply Voltage: 9 to 30 Vdc, Supply Current < 10 mA

0 to 5 Vdc Outputs		
Range	Output	Excitation*
5 to 1000 psia	0 to 5 Vdc	9 to 30 Vdc
1 to 10,000 psig	0 to 5 Vdc	9 to 30 Vdc
-15 to 30/50/100/ 150 psig	0 to 5 Vdc	9 to 30 Vdc
0 to -15 psig	0 to 5 Vdc	9 to 30 Vdc
-15 to 0 to +15 psig	-5 to 0 to +5 Vdc	9 to 30 Vdc

** Supply Current < 10 mA*

Compensated Temperature: -20 to 85°C (≤ 5 psig/psia is 0 to 50°C)

Metric Versions of PX309 also available from Omega. Please see PXM309 series.

To Order

Range psi	Range bar	1.5 m Cable Connection	mini DIN Connection	Twist-Lock Connection	M12 Connection
Absolute Pressure					
0 to 5	0 to 0.34	PX309-005A5V	PX319-005A5V	PX329-005A5V	PX359-005A5V
0 to 15	0 to 1	PX309-015A5V	PX319-015A5V	PX329-015A5V	PX359-015A5V
0 to 30	0 to 2.1	PX309-030A5V	PX319-030A5V	PX329-030A5V	PX359-030A5V
0 to 50	0 to 3.4	PX309-050A5V	PX319-050A5V	PX329-050A5V	PX359-050A5V
0 to 100	0 to 6.9	PX309-100A5V	PX319-100A5V	PX329-100A5V	PX359-100A5V
0 to 200	0 to 14	PX309-200A5V	PX319-200A5V	PX329-200A5V	PX359-200A5V
0 to 300	0 to 21	PX309-300A5V	PX319-300A5V	PX329-300A5V	PX359-300A5V
0 to 500	0 to 34	PX309-500A5V	PX319-500A5V	PX329-500A5V	PX359-500A5V
0 to 1000	0 to 69	PX309-1KA5V	PX319-1KA5V	PX329-1KA5V	PX359-1KA5V
Gage Pressure					
0 to 1	0 to 0.07	PX309-001G5V	PX319-001G5V	PX329-001G5V	PX359-001G5V
0 to 2	0 to 0.14	PX309-002G5V	PX319-002G5V	PX329-002G5V	PX359-002G5V
0 to 5	0 to 0.34	PX309-005G5V	PX319-005G5V	PX329-005G5V	PX359-005G5V
0 to 15	0 to 1	PX309-015G5V	PX319-015G5V	PX329-015G5V	PX359-015G5V
0 to 30	0 to 2.1	PX309-030G5V	PX319-030G5V	PX329-030G5V	PX359-030G5V
0 to 50	0 to 3.4	PX309-050G5V	PX319-050G5V	PX329-050G5V	PX359-050G5V
0 to 100	0 to 6.9	PX309-100G5V	PX319-100G5V	PX329-100G5V	PX359-100G5V
0 to 150	0 to 10	PX309-150G5V	PX319-150G5V	PX329-150G5V	PX359-150G5V
0 to 200	0 to 14	PX309-200G5V	PX319-200G5V	PX329-200G5V	PX359-200G5V
0 to 300	0 to 21	PX309-300G5V	PX319-300G5V	PX329-300G5V	PX359-300G5V
0 to 500	0 to 34	PX309-500G5V	PX319-500G5V	PX329-500G5V	PX359-500G5V
0 to 1000	0 to 69	PX309-1KG5V	PX319-1KG5V	PX329-1KG5V	PX359-1KG5V
0 to 2000	0 to 138	PX309-2KG5V	PX319-2KG5V	PX329-2KG5V	PX359-2KG5V
0 to 3000	0 to 207	PX309-3KG5V	PX319-3KG5V	PX329-3KG5V	PX359-3KG5V
0 to 5000	0 to 345	PX309-5KG5V	PX319-5KG5V	PX329-5KG5V	PX359-5KG5V
0 to 7500	0 to 517	PX309-7.5KG5V	PX319-7.5KG5V	PX329-7.5KG5V	PX359-7.5KG5V
0 to 10,000	0 to 690	PX309-10KG5V	PX319-10KG5V	PX329-10KG5V	PX359-10KG5V
Vacuum and Compound Gage Pressure					
0 to -15	—	PX309-015V5V	PX319-015V5V	PX329-015V5V	PX359-015V5V
-15 to 0 to +15	—	PX309-015CG5V	PX319-015CG5V	PX329-015CG5V	PX359-015CG5V
-15 to 30	-1.03 to 2.1	PX309-V030G5V	PX319-V030G5V	PX329-V030G5V	PX359-V030G5V
-15 to 50	-1.03 to 3.4	PX309-V050G5V	PX319-V050G5V	PX329-V050G5V	PX359-V050G5V
-15 to 100	-1.03 to 6.9	PX309-V100G5V	PX319-V100G5V	PX329-V100G5V	PX359-V100G5V
-15 to 150	-1.03 to 10.3	PX309-V150G5V	PX319-V150G5V	PX329-V150G5V	PX359-V150G5V

Comes complete with 5-point NIST-traceable calibration.

***Notes:** 1. Units 100 psig and above may be subjected to vacuum on the pressure port without damage. 2. For alternative performance specifications to suit your application, contact Engineering.*

***Ordering Examples: PX309-100G5V,** 100 psi gage pressure transducer with 0 to 5 Vdc output and 1.5 m cable termination.*

***PX319-015A5V,** 15 psi absolute pressure transducer with 0 to 5 Vdc output and mini DIN termination.*

***PX329-3KG5V,** 3000 psi gage pressure transducer with 0 to 5 Vdc output and twist-lock 6 pin connector termination. Mating connector sold separately; order **PT06V-10-6S-R.** Consult Sales for OEM pricing.*

How to Order PX309 Series

with 0 to 10 Vdc Output

0 to 10 Vdc Output
0-1 to 0-10,000 psi
0-70 mbar to 0-690 bar

PX329-015G10V shown smaller than actual size.

Twist-lock style.

PX309 Series

NIST CE

Standard

10V Output Specifications

(In Addition to Common Specifications on page 2)

Total Error Band (Includes Linearity, Hyesteresis, Repeatability, Thermal Hysteresis and Thermal Errors, Not Including Zero and Span Setting Accuracy): ±1.0% (5 psig/psia is ±1.5%, 2 psig is 3.0% and 1 psig is 4.5%)

Supply Voltage: 9 to 30 Vdc, Supply Current < 10 mA

0 to 10 Vdc Outputs		
Range	**Output**	**Excitation***
5 to 1000 psia	0 to 10 Vdc	9 to 30 Vdc
1 to 10,000 psig	0 to 10 Vdc	9 to 30 Vdc
-15 to 30/50/100/ 150 psig	0 to 10 Vdc	9 to 30 Vdc
0 to -15 psig	0 to 10 Vdc	9 to 30 Vdc
-15 to 0 to +15 psig	0 to 5 to +10 Vdc	9 to 30 Vdc

** Supply Current < 10 mA*

Compensated Temperature: -20 to 85°C (≤ 5 psig/psia is 0 to 50°C)

Metric Versions of PX309 also available from Omega. Please see PXM309 series.

To Order

Range psi	Range bar	1.5 m Cable Connection	mini DIN Connection	Twist-Lock Connection	M12 Connection
Absolute Pressure					
0 to 5	0 to 0.34	PX309-005A10V	PX319-005A10V	PX329-005A10V	PX359-005A10V
0 to 15	0 to 1	PX309-015A10V	PX319-015A10V	PX329-015A10V	PX359-015A10V
0 to 30	0 to 2.1	PX309-030A10V	PX319-030A10V	PX329-030A10V	PX359-030A10V
0 to 50	0 to 3.4	PX309-050A10V	PX319-050A10V	PX329-050A10V	PX359-050A10V
0 to 100	0 to 6.9	PX309-100A10V	PX319-100A10V	PX329-100A10V	PX359-100A10V
0 to 200	0 to 14	PX309-200A10V	PX319-200A10V	PX329-200A10V	PX359-200A10V
0 to 300	0 to 21	PX309-300A10V	PX319-300A10V	PX329-300A10V	PX359-300A10V
0 to 500	0 to 34	PX309-500A10V	PX319-500A10V	PX329-500A10V	PX359-500A10V
0 to 1000	0 to 69	PX309-1KA10V	PX319-1KA10V	PX329-1KA10V	PX359-1KA10V
Gage Pressure					
0 to 1	0 to 0.07	PX309-001G10V	PX319-001G10V	PX329-001G10V	PX359-001G10V
0 to 2	0 to 0.14	PX309-002G10V	PX319-002G10V	PX329-002G10V	PX359-002G10V
0 to 5	0 to 0.34	PX309-005G10V	PX319-005G10V	PX329-005G10V	PX359-005G10V
0 to 15	0 to 1	PX309-015G10V	PX319-015G10V	PX329-015G10V	PX359-015G10V
0 to 30	0 to 2.1	PX309-030G10V	PX319-030G10V	PX329-030G10V	PX359-030G10V
0 to 50	0 to 3.4	PX309-050G10V	PX319-050G10V	PX329-050G10V	PX359-050G10V
0 to 100	0 to 6.9	PX309-100G10V	PX319-100G10V	PX329-100G10V	PX359-100G10V
0 to 150	0 to 10	PX309-150G10V	PX319-150G10V	PX329-150G10V	PX359-150G10V
0 to 200	0 to 14	PX309-200G10V	PX319-200G10V	PX329-200G10V	PX359-200G10V
0 to 300	0 to 21	PX309-300G10V	PX319-300G10V	PX329-300G10V	PX359-300G10V
0 to 500	0 to 34	PX309-500G10V	PX319-500G10V	PX329-500G10V	PX359-500G10V
0 to 1000	0 to 69	PX309-1KG10V	PX319-1KG10V	PX329-1KG10V	PX359-1KG10V
0 to 2000	0 to 138	PX309-2KG10V	PX319-2KG10V	PX329-2KG10V	PX359-2KG10V
0 to 3000	0 to 207	PX309-3KG10V	PX319-3KG10V	PX329-3KG10V	PX359-3KG10V
0 to 5000	0 to 345	PX309-5KG10V	PX319-5KG10V	PX329-5KG10V	PX359-5KG10V
0 to 7500	0 to 517	PX309-7.5KG10V	PX319-7.5KG10V	PX329-7.5KG10V	PX359-7.5KG10V
0 to 10,000	0 to 690	PX309-10KG10V	PX319-10KG10V	PX329-10KG10V	PX359-10KG10V
Vacuum and Compound Gage Pressure					
0 to -15	—	PX309-015V10V	PX319-015V10V	PX329-015V10V	PX359-015V10V
-15 to 0 to +15	—	PX309-015CG10V	PX319-015CG10V	PX329-015CG10V	PX359-015CG10V
-15 to 30	-1.03 to 2.1	PX309-V030G10V	PX319-V030G10V	PX329-V030G10V	PX359-V030G10V
-15 to 50	-1.03 to 3.4	PX309-V050G10V	PX319-V050G10V	PX329-V050G10V	PX359-V050G10V
-15 to 100	-1.03 to 6.9	PX309-V100G10V	PX319-V100G10V	PX329-V100G10V	PX359-V100G10V
-15 to 150	-1.03 to 10.3	PX309-V150G10V	PX319-V150G10V	PX329-V150G10V	PX359-V150G10V

Comes complete with 5-point NIST-traceable calibration.

***Notes:** 1. Units 100 psig and above may be subjected to vacuum on the pressure port without damage.*
2. For alternative performance specifications to suit your application, contact Engineering.

***Ordering Examples: PX309-100G10V,** 100 psi gage pressure transducer with 0 to 10 Vdc output and 1.5 m cable termination.*

***PX319-015A10V,** 15 psi absolute pressure transducer with 0 to 10 Vdc output and mini DIN termination.*

***PX329-3KG10V,** 3000 psi gage pressure transducer with 0 to 10 Vdc output and twist-lock 6 pin connector termination. Mating connector sold separately; order **PT06V-10-6S-R.** Consult Sales for OEM pricing.*

How to Order PX309 Series
with 4 to 20 mA Output

4 to 20 mA Output
0-1 to 0-10,000 psi
0-70 mbar to 0-690 bar

PX309-030GI shown smaller than actual size.

Cable style.

PX309 Series

NIST CE

Standard

4 to 20 mA Output Specifications
(In Addition to Common Specifications on page 2)

Total Error Band (Includes Linearity, Hyesteresis, Repeatability, Thermal Hysteresis and Thermal Errors, Not Including Zero and Span Setting Accuracy): ±1.0% (5 psig/psia is ±1.5%, 2 psig is 3.0% and 1 psig is 4.5%)

Supply Voltage: 9 to 30 Vdc

4 to 20 mA Outputs		
Range	Output	Excitation
All models (psia, psig)	4 to 20 mA	9 to 30 Vdc
-15 to 0 to +15 psig	4 to 12 to 20 mA	9 to 30 Vdc

Compensated Temperature: -20 to 85°C (≤ 5 psig/psia is 0 to 50°C)

Reverse Polarity Protected

Over Voltage Protection

Metric Versions of PX309 also available from Omega. Please see PXM309 series.

To Order

Range psi	Range bar	1.5 m Cable Connection	mini DIN Connection	Twist-Lock Connection	M12 Connection
Absolute Pressure					
0 to 5	0 to 0.34	**PX309-005AI**	**PX319-005AI**	**PX329-005AI**	**PX359-005AI**
0 to 15	0 to 1	**PX309-015AI**	**PX319-015AI**	**PX329-015AI**	**PX359-015AI**
0 to 30	0 to 2.1	**PX309-030AI**	**PX319-030AI**	**PX329-030AI**	**PX359-030AI**
0 to 50	0 to 3.4	**PX309-050AI**	**PX319-050AI**	**PX329-050AI**	**PX359-050AI**
0 to 100	0 to 6.9	**PX309-100AI**	**PX319-100AI**	**PX329-100AI**	**PX359-100AI**
0 to 200	0 to 14	**PX309-200AI**	**PX319-200AI**	**PX329-200AI**	**PX359-200AI**
0 to 300	0 to 21	**PX309-300AI**	**PX319-300AI**	**PX329-300AI**	**PX359-300AI**
0 to 500	0 to 34	**PX309-500AI**	**PX319-500AI**	**PX329-500AI**	**PX359-500AI**
0 to 1000	0 to 69	**PX309-1KAI**	**PX319-1KAI**	**PX329-1KAI**	**PX359-1KAI**
Gage Pressure					
0 to 1	0 to 0.07	**PX309-001GI**	**PX319-001GI**	**PX329-001GI**	**PX359-001GI**
0 to 2	0 to 0.14	**PX309-002GI**	**PX319-002GI**	**PX329-002GI**	**PX359-002GI**
0 to 5	0 to 0.34	**PX309-005GI**	**PX319-005GI**	**PX329-005GI**	**PX359-005GI**
0 to 15	0 to 1	**PX309-015GI**	**PX319-015GI**	**PX329-015GI**	**PX359-015GI**
0 to 30	0 to 2.1	**PX309-030GI**	**PX319-030GI**	**PX329-030GI**	**PX359-030GI**
0 to 50	0 to 3.4	**PX309-050GI**	**PX319-050GI**	**PX329-050GI**	**PX359-050GI**
0 to 100	0 to 6.9	**PX309-100GI**	**PX319-100GI**	**PX329-100GI**	**PX359-100GI**
0 to 150	0 to 10	**PX309-150GI**	**PX319-150GI**	**PX329-150GI**	**PX359-150GI**
0 to 200	0 to 14	**PX309-200GI**	**PX319-200GI**	**PX329-200GI**	**PX359-200GI**
0 to 300	0 to 21	**PX309-300GI**	**PX319-300GI**	**PX329-300GI**	**PX359-300GI**
0 to 500	0 to 34	**PX309-500GI**	**PX319-500GI**	**PX329-500GI**	**PX359-500GI**
0 to 1000	0 to 69	**PX309-1KGI**	**PX319-1KGI**	**PX329-1KGI**	**PX359-1KGI**
0 to 2000	0 to 138	**PX309-2KGI**	**PX319-2KGI**	**PX329-2KGI**	**PX359-2KGI**
0 to 3000	0 to 207	**PX309-3KGI**	**PX319-3KGI**	**PX329-3KGI**	**PX359-3KGI**
0 to 5000	0 to 345	**PX309-5KGI**	**PX319-5KGI**	**PX329-5KGI**	**PX359-5KGI**
0 to 7500	0 to 517	**PX309-7.5KGI**	**PX319-7.5KGI**	**PX329-7.5KGI**	**PX359-7.5KGI**
0 to 10,000	0 to 690	**PX309-10KGI**	**PX319-10KGI**	**PX329-10KGI**	**PX359-10KGI**
Vacuum and Compound Gage Pressure					
0 to -15	—	**PX309-015VI**	**PX319-015VI**	**PX329-015VI**	**PX359-015VI**
-15 to 0 to +15	—	**PX309-015CGI**	**PX319-015CGI**	**PX329-015CGI**	**PX359-015CGI**
-15 to 30	-1.03 to 2.1	**PX309-V030GI**	**PX319-V030GI**	**PX329-V030GI**	**PX359-V030GI**
-15 to 50	-1.03 to 3.4	**PX309-V050GI**	**PX319-V050GI**	**PX329-V050GI**	**PX359-V050GI**
-15 to 100	-1.03 to 6.9	**PX309-V100GI**	**PX319-V100GI**	**PX329-V100GI**	**PX359-V100GI**
-15 to 150	-1.03 to 10.3	**PX309-V150GI**	**PX319-V150GI**	**PX329-V150GI**	**PX359-V150GI**

Comes complete with 5-point NIST-traceable calibration.

Notes: *1. Units 100 psig and above may be subjected to vacuum on the pressure port without damage. 2. For alternative performance specifications to suit your application, contact Engineering.*

Ordering Examples: PX309-100GI, *100 psi gage pressure transducer with 4 to 20 mA output and 1.5 m cable termination.* ***PX319-015AI,*** *15 psi absolute pressure transducer with 4 to 20 mA output and mini DIN termination.* ***PX329-3KGI,*** *3000 psi gage pressure transducer with 4 to 20 mA output and twist-lock 6 pin connector termination. Mating connector sold separately; order* ***PT06V-10-6S-R.*** *Consult Sales for OEM pricing.*

PX309 Series
Accessories

DP8PT, shown smaller than actual size.

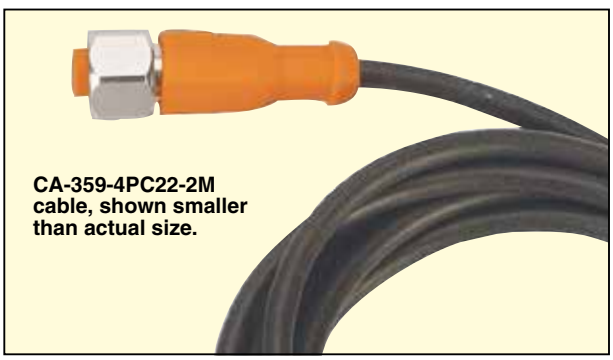

CA-359-4PC22-2M cable, shown smaller than actual size.

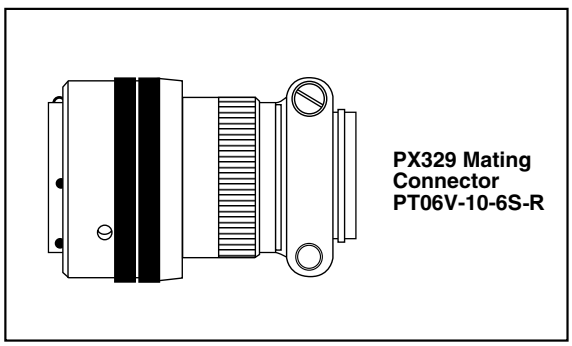

PX329 Mating Connector PT06V-10-6S-R

Accessories

Model No.	Description
CAL-3	Recalibration with 5 point NIST traceable documentation
PT06V-10-6S-R*	Vented mate connector for PX329
PT06F10-6S-R*	Sealed mate for PX329
CA-329-4PC24-005	4-conductor mating twist-lock 6 pin connector with 1.5 m (5') cable for PX329
CX5302	Extra mini DIN connector for PX319
CA-359-4PC22-2M	2 m (6') vented cable with M12 connector for PX359 for gage ranges ≤500 psi
CA-359-4PC22-5M	5 m (16') vented cable with M12 connector for PX359 for gage ranges ≤500 psi
M12C-PVC-4-S-F-5	5 m (16') PVC cable, straight 4-pin M12 female connector one end, flying leads one end, for all PX359 absolute ranges and gage ranges >500 psi
DP8PT*	4-digit meter for both mV/V and amplified PX3*9 models
DP25B-S*	4-digit strain meter for mV/V PX3*9 models
DP25B-E*	4-digit process meter for amplified PX3*9 models

** See the Installation Notes for cable assemblies.*
Note: *Complete meter specifications can be found at Omega.*

Installation Notes

CAUTION **On the PX3*9 Series 0 to 5 Vdc output, do not short the Output(+) to Excitation(+) as permanent damage to the electronics will occur.**

PX319-100GV

PX309-100GV.

All models shown smaller than actual size.

PX329-100GV

PX359-100GV

Installation Notes

PX309 Series

All PX309 (gage and absolute) use a vented cable. Gage PX309 sensors up to 500 PSIG must be terminated in a clean dry area that is open to atmosphere for correct operation. All other sensors (> 500 psig and all psia ranges) must be terminated in a dry area but do not need to be vented to atmosphere. These cables should be sealed (e.g. RTV) to protect the sensor from moisture getting in to the sensor through the cable.

PX319 Series

All PX319 are vented through a hole in the connector and through the mating connector. A vented cable must be used for low pressure gage sensors up to 500 PSIG and must be terminated in a clean dry area that is open to atmosphere for correct operation. The gasket for the DIN mating connector has a special stiffener (included) between the mating surfaces and is used to maintain the IP65 rating (Spare Gaskets are Part number P002612). Search cable assembly CA-319 with a “WP” on the end for gage pressure under 500 psi. All other PX319 sensors can use standard cable without the “WP” but must be terminated in a dry location or sealed to prevent water from getting into the cable/sensor.

PX329 Series

All PX329 are vented through Pin F of the twist-lock connector. Gage PX329 up to 500 PSIG must be vented for correct operation and must use the connector PT06V-10-6S-R which has no socket on pin F. Cables for these sensors must use a vented cable, be sealed at the back of the mating connector and be terminated in a dry clean area open to the atmosphere. Search cable assembly CA-329 with “WP” for gage pressure under 500 psi. All other PX329 can use the standard PT06F10-6S-R connector or cables (See cable assembly CA-329 without “WP” ending).

PX359 Series

All PX359 are vented through a hole in the connector. Gage PX359 up to 500 psig suggested vented for correct operation and must use the either the CA-359-4PC22-2M or CA-359-4PC22-5M or similar cable. They also must be terminated in a clean dry area open to the atmosphere. All other PX359 can use a standard M12 mating cable like the M12C-PVC-4-S-F-5.