WIRING DIAGRAM

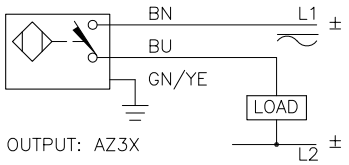

NO SHORT-CIRCUIT PROTECTION.
ALWAYS WIRE A LOAD IN SERIES WITH THE SENSOR.

SPECIFICATIONS

OPERATING VOLTAGE	20–250 VAC, 10–300 VDC
LINE FREQUENCY	40–60 Hz
DIFFERENTIAL TRAVEL (HYSTERESIS)	3–15% (5% TYPICAL)
VOLTAGE DROP ACROSS CONDUCTING SENSOR	<7.0 V at FULL RATED CURRENT
OUTPUT FUNCTION	NORMALLY OPEN 2-WIRE AC/DC
SHORT-CIRCUIT PROTECTED	NO
CONTINUOUS LOAD CURRENT	AC: ≤400 mA; DC: ≤300 mA
OFF-STATE (LEAKAGE) CURRENT	<1.7 mA
MINIMUM LOAD CURRENT	≥5.0 mA
INRUSH CURRENT	≤8.0 A (≤10 ms, 5% DUTY CYCLE)
TIME DELAY BEFORE AVAILABILITY	≤25 ms
POWER-ON EFFECT	Per IEC 947-5-2
TRANSIENT PROTECTION	Per EN 60947-5-2
OPERATING TEMPERATURE	-25°C to +70°C (-13°F to +158°F)
ENCLOSURE	MEETS NEMA 1, 3, 4, 6, 13 AND IEC IP67
SHOCK	30 g, 11 ms
VIBRATION	55 Hz, 1 mm AMPLITUDE (IN ALL 3 PLANES)
LED FUNCTION	RED: OUTPUT ENERGIZED
RATED OPERATING DISTANCE(Sn)	10 mm = .394" (NOMINAL)
SWITCHING FREQUENCY	20 Hz
REPEATABILITY	≤2% OF RATED OPERATING DISTANCE
EMBEDDABLE (SHIELDED)	NO
LOCKNUT M18x1	24.0 mm AF, 27.5 mm AC, 4.0 mm THK

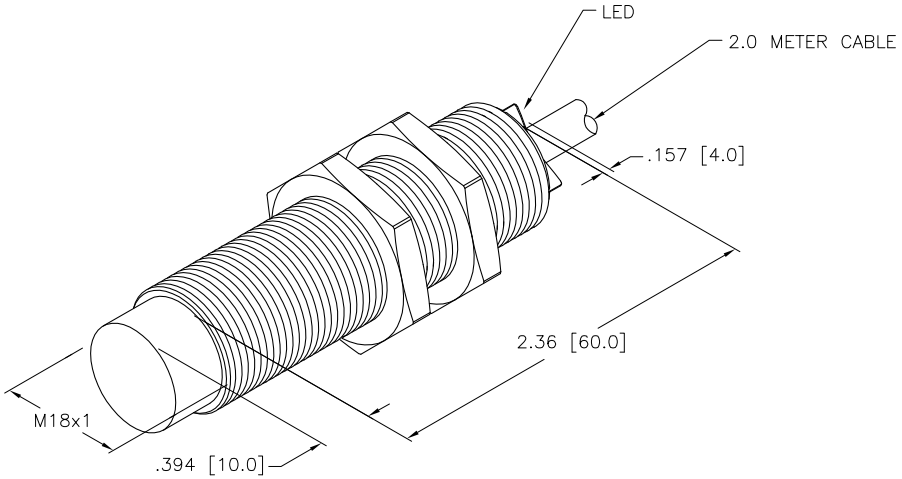

SOURCE DRAWING - FOR REFERENCE ONLY

NOTE:
1. MATERIALS:
   BARREL – STAINLESS STEEL
   LOCKNUTS – STAINLESS STEEL
   SENSING FACE – PA12-GF30 PLASTIC
   END CAP – TPE-O ELASTOMER

2. "/S1023" DESIGNATES WET/WASHDOWN APPLICATIONS. LENSED LEDS AND SERPENTINE FULLY POTTED INTERNAL CABLE.

REV	DESCRIPTION	BY	DATE	ECO NO.
B	UPDATE LENGTH FROM 70MM TO 60MM, SEE ECO	RWC	02/12/10	30002

RELATED DOCUMENTS
1.
2.
3.
4.

MATERIAL: SEE NOTES

FINISH

3RD ANGLE PROJECTION

ALL DIMENSIONS DISPLAYED ON THIS DRAWING ARE FOR REFERENCE ONLY

CONTACT TURCK FOR MORE INFORMATION

DRFT RDS | DATE 02/05/08
DSGN SD | SCALE 1=1.0

UNIT OF MEASUREMENT
INCH [MILLIMETER]
DO NOT SCALE THIS DRAWING

TURCK INC
High Technology Sensors and Automation Controls
3000 CAMPUS DRIVE
MINNEAPOLIS, MN 55441
1-800-544-7769
(763) 553-7300
(763) 553-0708 fax
turck.com

DESCRIPTION: NI10-EG18-AZ3X/S1023

IDENTIFICATION NO. T4330589 | REV B

FILE: T4330589 | SHEET 1 OF 1