WIRING DIAGRAM

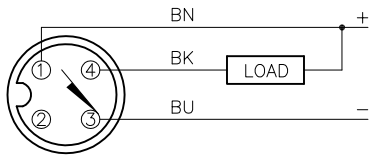

OUTPUT: AN6X

SHORT–CIRCUIT AND OVERLOAD PROTECTED

LOCKNUT LN–M12 (SST)

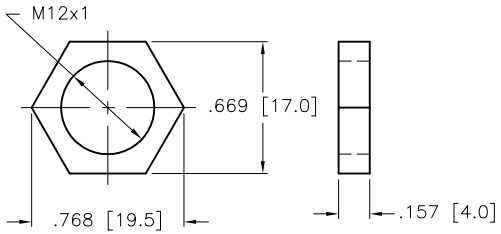

SPECIFICATIONS

RATED OPERATING DISTANCE	4mm [.157]
MOUNTING MODE	FLUSH
TEMPERATURE DRIFT	≤±10%
HYSTERESIS	3–15%
MIN. REPEAT ACCURACY	≤2%
OPERATING TEMPERATURE	–25°C to +75°C (–13°F to +167°F)
RATED OPERATIONAL VOLTAGE	10–30 VDC
RESIDUAL RIPPLE	≤10%
DC RATED OPERATIONAL CURRENT	≤200 mA
NO–LOAD CURRENT	≤15 mA
RESIDUAL CURRENT	≤0.1 mA
RATED INSULATION VOLTAGE	≤0.5 kV
SHORT–CIRCUIT PROTECTION	YES
MAX. VOLTAGE DROP	≤1.8 V
WIRE BREAKAGE PROTECTION	INCORPORATED
REVERSE POLARITY PROTECTION	INCORPORATED
OUTPUT FUNCTION	3–WIRE, NORMALLY OPEN, NPN
MAX. SWITCHING FREQUENCY	≤2 kHz
HOUSING MATERIAL	SST
ACTIVE FACE MATERIAL	PLASTIC, PA12–GF30
CONNECTION	M12x1
VIBRATION RESISTANCE	55 Hz (IN ALL 3 PLANES)
SHOCK RESISTANCE	30 g, 11 ms
DEGREE OF PROTECTION	IP 67
SWITCHING STATUS INDICATION	LED, YELLOW

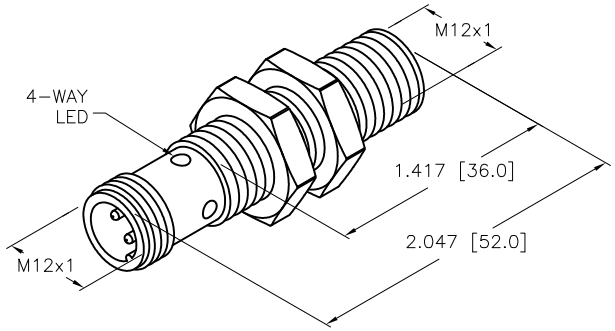

SOURCE DRAWING - FOR REFERENCE ONLY

RELATED DOCUMENTS	3RD ANGLE PROJECTION	THIS DRAWING IS CONFIDENTIAL AND THE PROPERTY OF TURCK INC. USE OF THIS DOCUMENT WITHOUT WRITTEN PERMISSION IS PROHIBITED.	TURCK INC High Technology Sensors and Automation Controls	3000 CAMPUS DRIVE MINNEAPOLIS, MN 55441 1–800–544–7769 (763) 553–7300 (763) 553–0708 fax turck.com
1. 2. 3. 4.				
MATERIAL SEE SPECS	ALL DIMENSIONS DISPLAYED ON THIS DRAWING ARE FOR REFERENCE ONLY	DRFT KMY / DATE 04/19/12	DESCRIPTION BI 4–EM12–AN6X–H1141	
		APVD J.M. / SCALE 1=1.0		
FINISH SEE SPECS	CONTACT TURCK FOR MORE INFORMATION	UNIT OF MEASUREMENT **INCH [MILLIMETER]**	IDENTIFICATION NO. T4607130–001	REV A
		DO NOT SCALE THIS DRAWING	FILE: T4607130–001	SHEET 1 OF 1

REV	DESCRIPTION	BY	DATE	ECO NO.
A	DRAWING RELEASE	KMY	04/19/12	

Approved 04/19/2012, work order #27977 by J.M.