Inertia Dynamics type FSBR brakes are designed for applications requiring minimum space (short axial length) or on motors with short shaft extensions. When mounted, the armature hub is installed on the shaft first, then the brake is installed over the hub and attached to the motor.

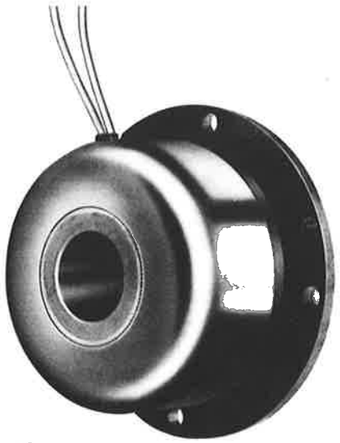

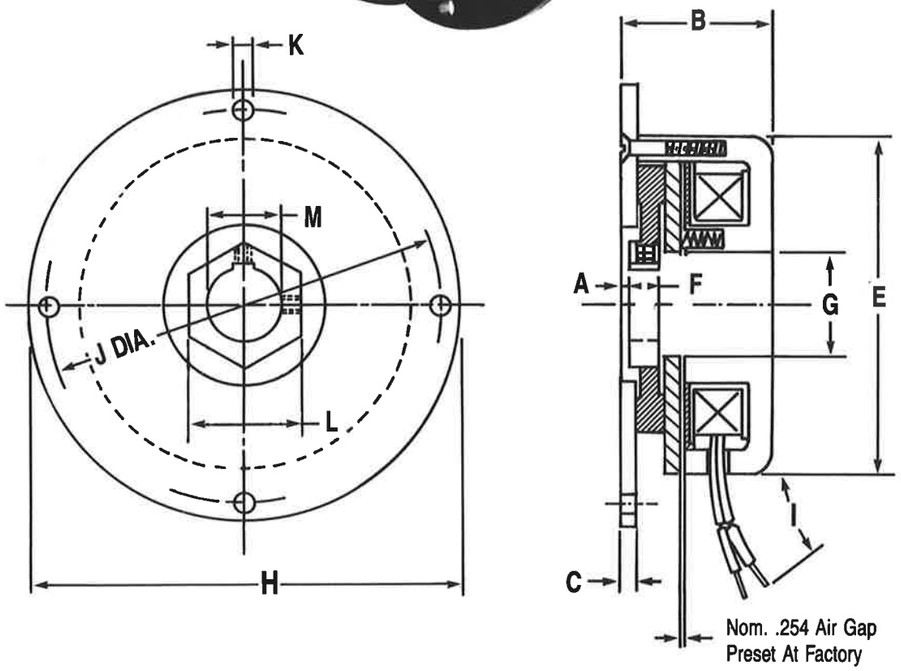

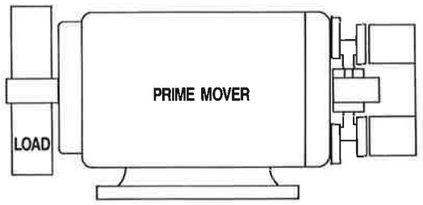

Customer Shall Maintain

The perpendicularity of the mounting surface with respect to the shaft is not to exceed .127mm T.I.R. at a diameter equal to the brake body outside diameter. The concentricity between the mounting holes and the shaft should not exceed .508mm T.I.R.

Mechanical

MODEL NO.	STATIC TORQUE N-m	INERTIA kg-cm² ARMATURE & HUB ASSEMBLY	WEIGHT kg
FSBR007	.791	.039	.31
FSBR015	1.69	.039	.34
FSBR035	3.95	.246	.68
FSBR050	5.65	.246	.77
FSBR100	11.3	.600	1.58

Electrical

MODEL NO.	90 V.D.C.		24 V.D.C.		12 V.D.C.		120 V.A.C.	
	AMPS	OHMS	AMPS	OHMS	AMPS	OHMS	AMPS	OHMS
FSBR007	.059	1520	.247	97.3	.477	25.1	.045	N.A.
FSBR015	.098	922	.369	65.1	.719	16.7	.077	N.A.
FSBR035	.093	964	.394	61.0	.755	15.9	.073	N.A.
FSBR050	.194	465	.717	33.5	1.43	8.4	.140	N.A.
FSBR100	.180	501	.707	34	1.41	8.5	.142	N.A.

Lead wire is U.L. recognized style 1015, 22 gage. Insulation is 2.41 mm O.D.

Dimensions

MODEL NO.	HUB STYLE	A MAX.	B MAX.	C NOM.	E MAX.	F MIN.	G REF.	H MAX.	I ± 12.7	J NOM.	K MIN.	L NOM.	M BORES & KEYWAYS	
													BORE	NOMINAL KEYWAY
FSBR007	Hex Drive Only	1.575	24.384	2.921	57.404	15.367	19.837	82.169	304.800	72.238	4.369	15.875	6H9 8H9	2-JS10 2-JS10
FSBR015	Hex Drive Only	1.575	30.480	2.921	60.960	15.367	24.003	82.169	304.800	72.238	4.369	15.875	8H9 10H9	2-JS10 3-JS10
FSBR035	Hex Drive Only	2.388	48.387	4.572	71.374	7.112	22.631	88.900	457.200	79.375	5.080	28.575	10H9 15H9	3-JS10 5-JS10
FSBR050	Hex Drive Only	2.388	48.387	4.572	71.374	7.112	22.631	88.900	457.200	79.375	5.080	28.575	15H9 17H9	5-JS10 5-JS10
FSBR100	Hex Drive Only	3.556	47.498	4.191	101.600	14.097	30.175	133.350	457.200	120.650	5.486	38.100	15H9 17H9	5-JS10 5-JS10

NOTES:

Hex Drive - FSBR

1. Refer to dimension "A" for the distance the hub should be installed on the shaft from the mounting surface.
2. Dimension "F" is the minimum length of the hex hub.