EN

Professionally approved products.

Datasheet

2 Cup suction Lifter, 70kg

RS Stock number 431-0474

Specifications:

- Sturdy plastic construction with 2 suction pads and individual lever operated
- Ideal for heavy lifting applications
- ϕ120mm pad diameter

Dimensions:

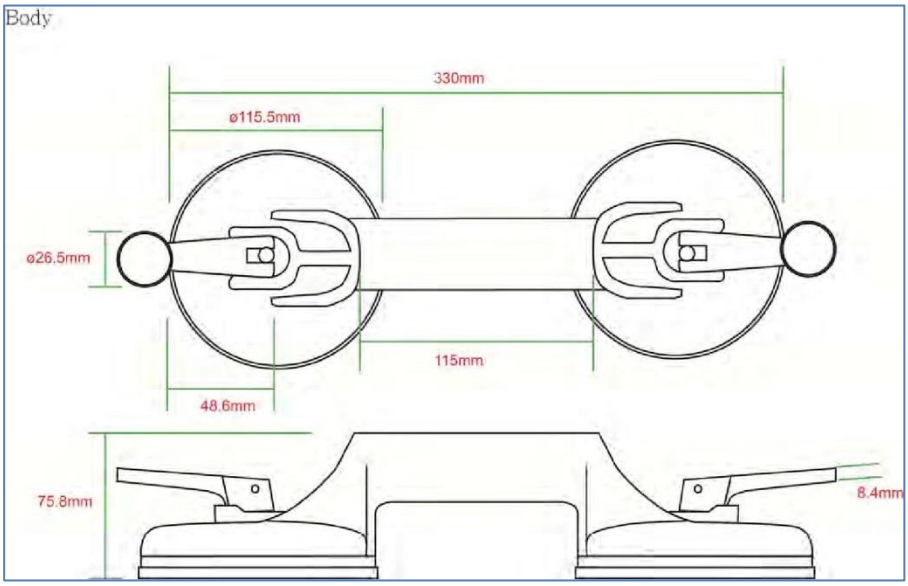

RS, Professionally Approved Products, gives you professional quality parts across all products categories. Our range has been testified by engineers as giving comparable quality to that of the leading brands without paying a premium price.