EN

Professionally approved products.

Datasheet

6V ac 2 Output Through Hole PCB Transformer, 6VA

RS Stock number 504-543

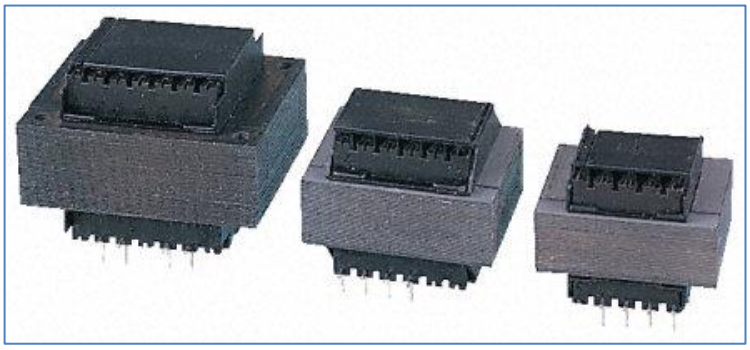

Description:

230 Vac Primary Transformers
Fully shrouded bobbins
Extra pins for secure board mounting
100% electrical and flash tested
Tested in accordance with BS3535 and EN 60 742

6VA PCB Mount, 230v Primary, Transformer Specification

Nominal Input Voltage:	230V +/-10%, 50/60Hz
No-load Input Current @ 230V 50Hz:	35mA (rms) max.

Stock Number	Full Load Output Voltage +/-5% @ 6VA	Secondary Resistance Ω +/- 15% @ 20 degree C
504-460	5 + 5	1.48 + 1.74
504-543	6 + 6	2.2 + 2.58
504-549	9 + 9	5.23 + 6.15
504-559	12 + 12	8.75 + 10.27
504-565	15 + 15	13.5 + 15.87
504-533	20 + 20	26.3 + 30.8
504-515	24 + 24	45.8 + 53.8

EN

Professionally approved products.

Datasheet

Primary Winding Resistance:		660Ω +/- 15% @ 20 degree C
Regulation:		< 22% typical* for range
Maximum Winding Temperature Rise:		55 degree C
Efficiency:		> 77%
Iron Loss:		0.58W
Copper Loss:		1.18W
Flash Test:	Primary/Secondary's	4KV rms For 6 Seconds
	Windings/Core	2KV rms For 6 Seconds
Insulation Test:	Primary/Secondary's/Core	>50MΩ @ 500Vdc @ 20degree C
Over potential Test:		460V 500Hz applied across primary, secondary's open circuit. (Type Test Only)
Core Material:		M6/35
Winding Wire:		BS6811 Section 3.1 Grade 1
Bobbin and Full Shrouds:		Split Section, Glass Filled Nylon
Overall Insulation Rating:		Class B (130 degree C)
Finish:		Class F Stoved Varnish
Dimensions:		43mm wide x 33mm high x 36mm deep (nominal)
Pins:		1mm dia., 5mm long
Weight:		0.18Kg nominal

* **Calculated as Regulation =** $\frac{(V_{NL} - V_{FL})}{V_{NL}}$ **x 100%**

All tolerances and production tests in accordance with EN61558 (EN60742)

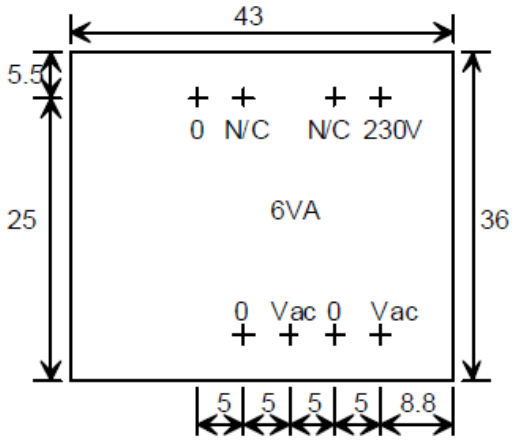

PIN LAYOUT