700-448386

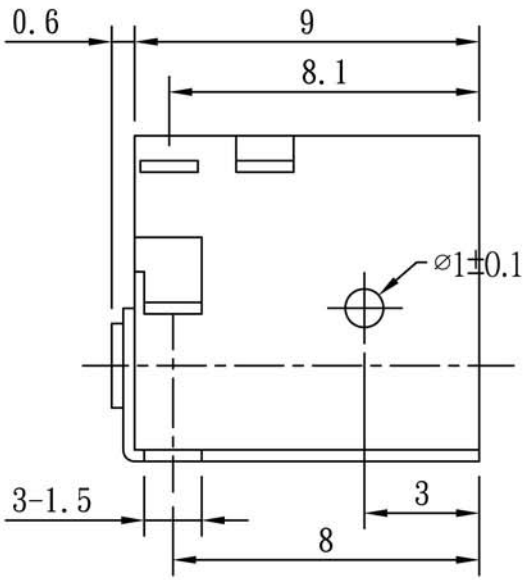

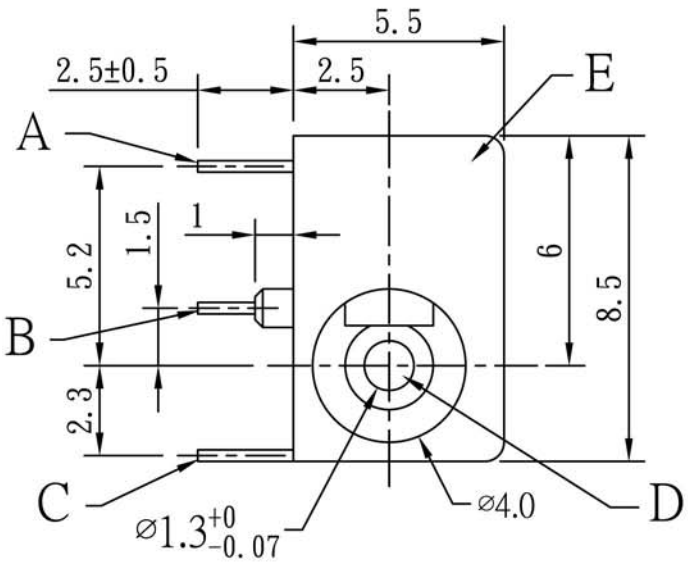

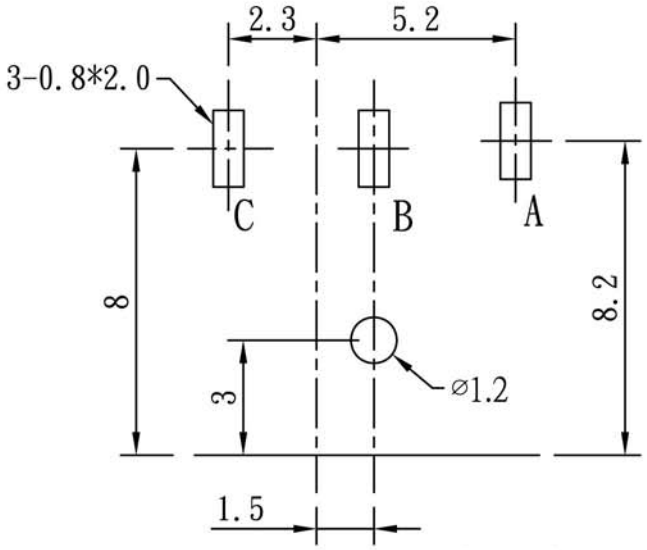

P.C.B LAYOUT(±0.1)

PLUG

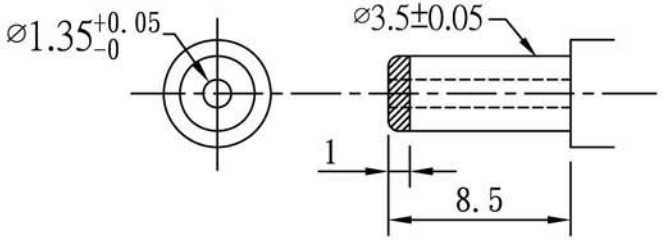

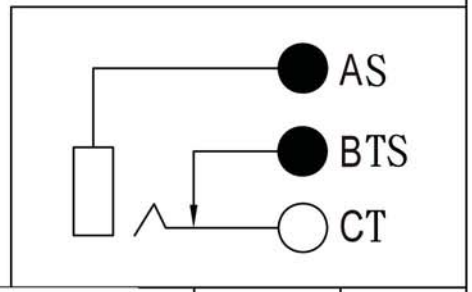

TITLE: DC JACK

Unless Specified,otherwise tolerance are +/-0.1mm; Remark:ROHS Requirement Applied(符合ROHS)

NO	Description	Unit	Materials	Finish/Color	PART NO.
A.	TERMINAL	1	BRASS	TIN	
B.	TIP SHUNT	1	BRASS	TIN	
C.	TIP	1	P.B.S	TIN	
D.	PIN	1	BRASS	NICKEL	
E.	HOUSING	1	PBT-94V0	BLACK	

REV	DESCRIPTION	Issue	A	DATE:	2008/4/3
1					
2					
3					
4					

Approved	
Check	
Drawn	李傑
Unit	M/M
Scale	5:1