RS ITEM NO 203-638 **TEM NO E10SR24A**

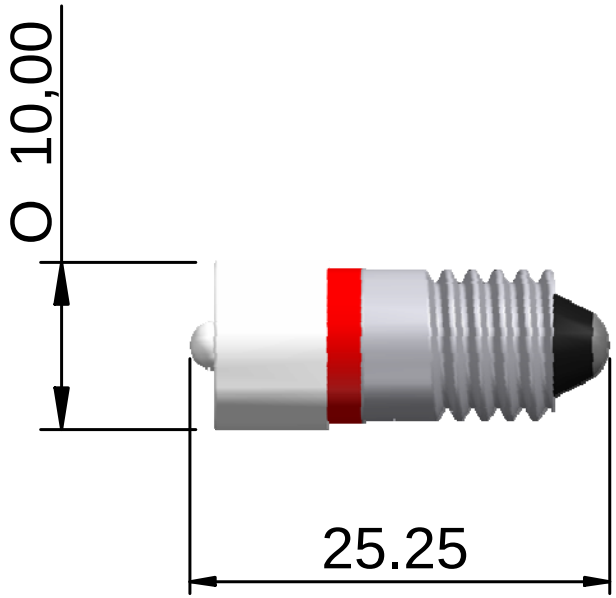

LED/Multiled	*LED*	**Optimum voltage (V)**	*24Vac/dc*	**Intensity**	*1750mcd*
Mounting Size	*10x25mm*	**Rectifier**	*Half Wave*		
Mounting Finish		**AC current**	*9mA*		
Protection	*-*	**DC current**	*17mA*		
Mount Holder	*E10*	**Voltage Tolerance (%)**	*10%*		
Chip Qty	*8*	**Optimum temperature (°C)**	*-30°C...+60°C*		
Indicator colour	*Red*	**Storage temperature (°C)**	*-30°C...+60°C*		
Wavelength (nm)	*630*	**Contact Tab**	*E10 Cap*		

RoHS

Dimension in mm (typical), not to scale.
We reserve the right to make changes without further notice to this product to improve reliability, function or design.