New

Electric Slide Tables

Step Motor (Servo/24 VDC) Servo Motor (24 VDC)

RoHS

- Reduced cycle time
- Positioning repeatability: ±0.05 mm
- Max. pushing force: 180 N
  Max. acceleration/deceleration: 5,000 mm/s²
  Max. speed: 400 mm/s

Compact Type *Series LES*

Size: 8, 16, 25

Compact

Compared with the LESH, Workpiece mounting surface height: Reduced by up to 12%

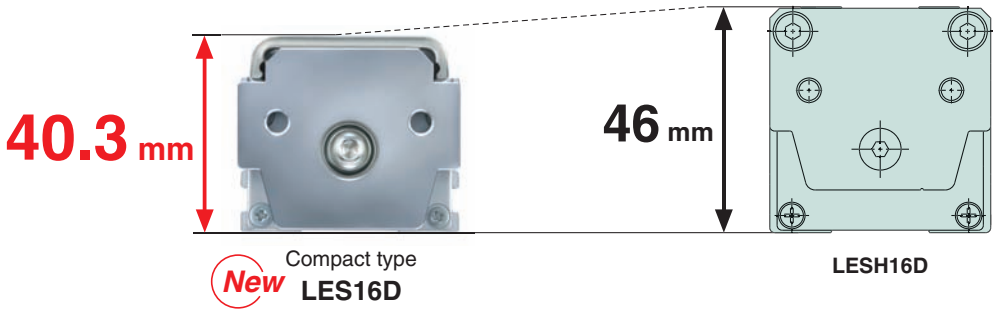

Basic type/R type

Symmetrical type/L type

In-line motor type/D type

High Rigidity Type *Series LESH*

Size: 8, 16, 25

High rigidity

Deflection: 0.016 mm*

* LESH16-50 Load: 25 N

Basic type/R type

Series LESH□R

Symmetrical type/L type

Series LESH□L

In-line motor type/D type

Series LESH□D

Step Motor (Servo/24 VDC)

Servo Motor (24 VDC)

Controller/Driver

▶Step data input type
Series LECP6/LECA6
- 64 points positioning
- Input using controller setting kit or teaching box

▶Programless type
Series LECP1
- 14 points positioning
- Control panel setting

▶Pulse input type
Series LECPA

Series LES/LESH

SMC

CAT.ES100-78E

Compact Type *Series LES*

Vertical work load

Increased by up to 50%*

* By reducing weight of the moving parts
* Compared with the LESH16

Model	Vertical work load (kg)
LES16	3.0
LESH16	2.0

Applications

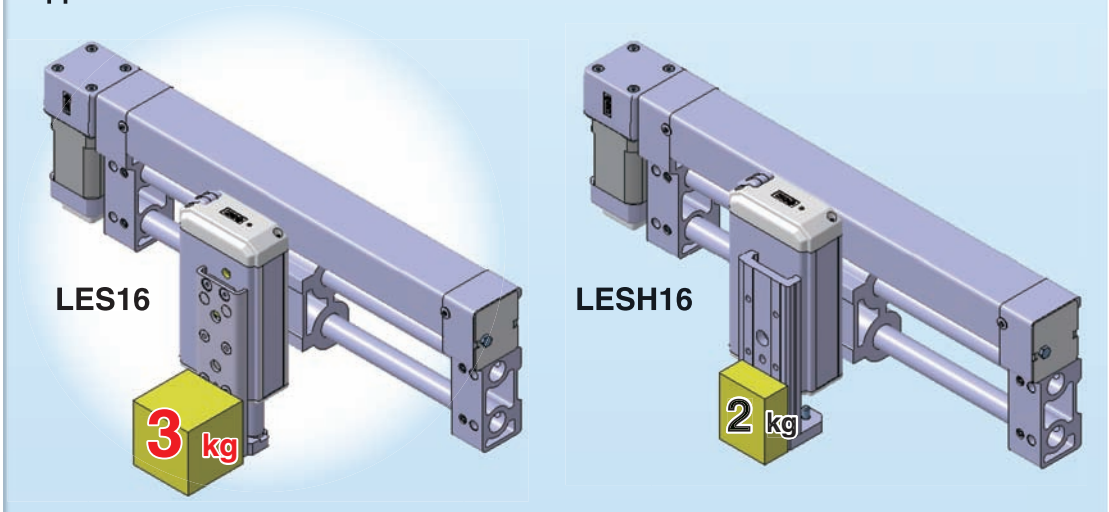

Light weight

Reduced by up to 29%

Model	Weight (kg)	Reduction amount
LES16D-100	1.20	Reduced by 0.50 kg
LESH16D-100	1.70	

- **Max. pushing force: 180 N**
- **Positioning repeatability: ±0.05 mm**
- **Possible to reduce cycle time**
  Max. acceleration/deceleration: 5,000 mm/s²
  Max. speed: 400 mm/s
- **2 types of motors selectable/Step motor (Servo/24 VDC), Servo motor (24 VDC)**

Basic type/R type
Series LES□R

Symmetrical type/L type
Series LES□L

In-line motor type/D type
Series LES□D

High Rigidity Type *Series LESH*

High rigidity **Deflection: 0.016 mm*** * LESH16-50 Load: 25 N

Integration of the guide rail and the table
Uses a circulating linear guide.

Positioning pin hole
Improved workpiece mounting reproducibility

Body mounting through-hole
Can be mounted from the top.

Workpiece mounting tap

Integration of the guide rail and the table

◎Compact, Space-saving
For LESH8 R/L, 50 mm stroke

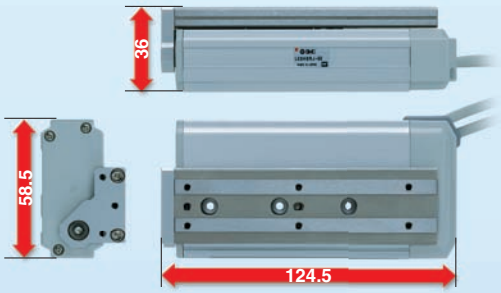

◎Reduced by 61% in volume*
* Compared with the LESH16-50/LXSH-50
* For R/L type

◎Motor integrated into the body
Built-in motor

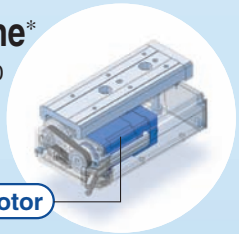

2 types of motors selectable

- **Step motor (Servo/24 VDC)**
  Ideal for transfer of high load at a low speed and pushing operation
- **Servo motor (24 VDC)**
  Stable at high speed and silent operation

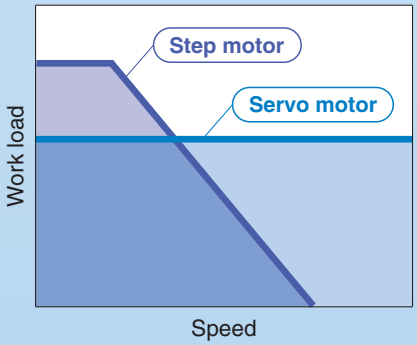

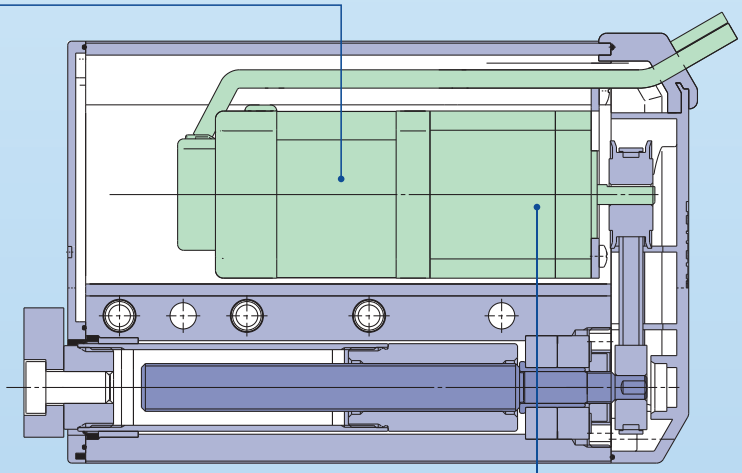

Non-magnetizing lock mechanism (Option)
Prevents workpieces from dropping (holding)

Application Examples

Positioning of pallets on a conveyer

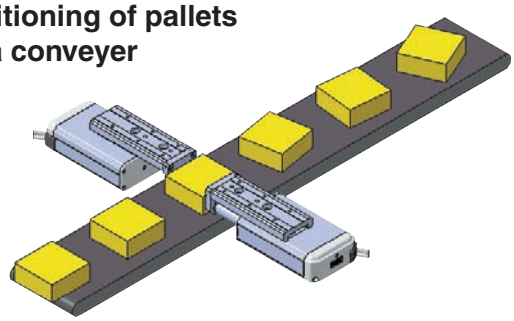

Z motion for pick and place

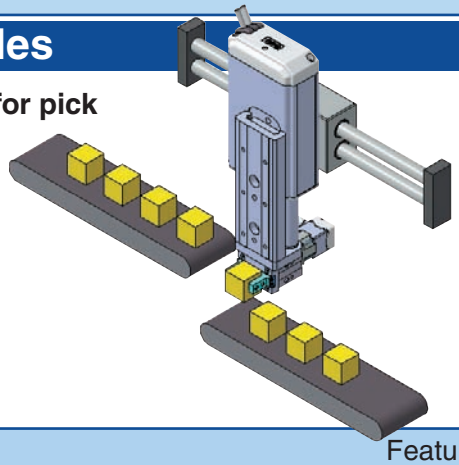

Symmetrical Type/L Type

The locations of the table and cable are opposite those of the basic type (R type), expanding design applications.

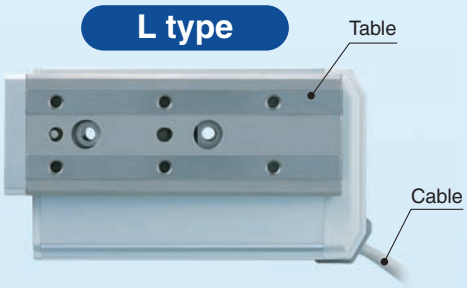

Installation example

When two tables are installed side by side, they will not interfere with each other, allowing for space saving.

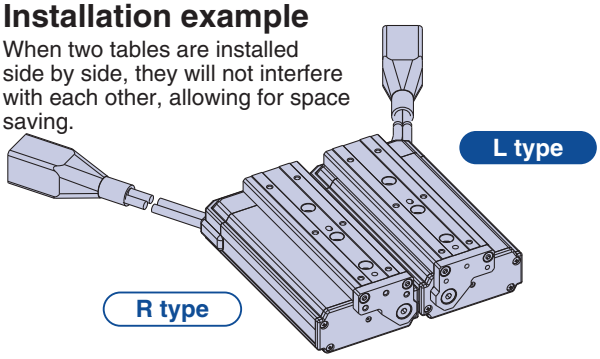

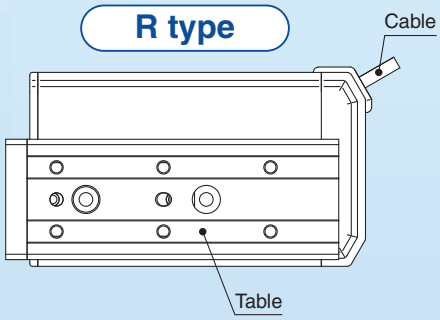

In-line Motor Type/D Type

Width dimension shortened by up to 45%

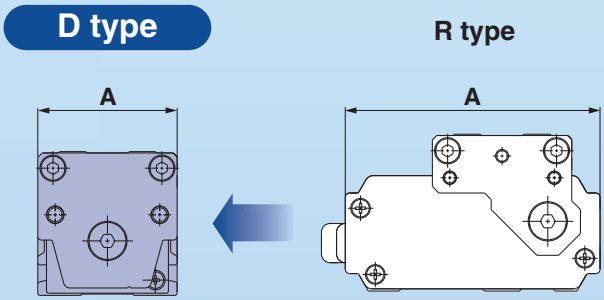

A Dimension (mm)

Size	D type	R/L type
8	32	58.5
16	45	72.5
25	61	106

How to Mount

Through-hole mounting
(R/L/D type)

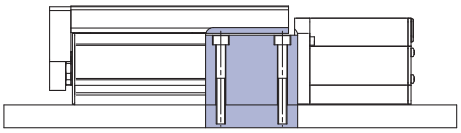

Side holder mounting
(D type)

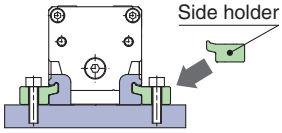

Body tapped mounting
(R/L/D type)

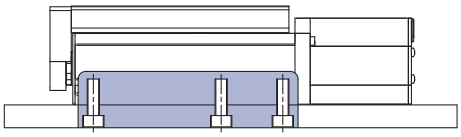

Step Data Input Type Series LECP6/LECA6

Step motor
(Servo/24 VDC)
LECP6

Servo motor
(24 VDC)
LECA6

Simple Setting to Use Straight Away

◎Easy Mode for Simple Setting

If you want to use it right away, select "Easy Mode."

<When a PC is used>
Controller setting software

- Step data setting, test operation, move jog and move for the constant rate can be set and operated on one screen.

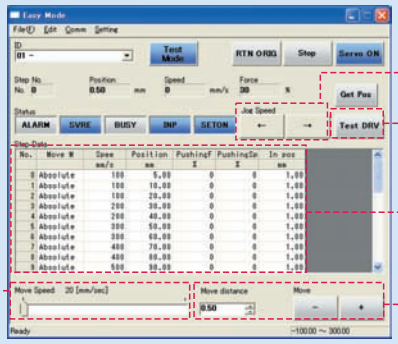

<When a TB (teaching box) is used>

- Simple screen without scrolling promotes ease of setting and operating.
- Pick up an icon from the first screen to select a function.
- Set up the step data and check the monitor on the second screen.

Example of setting the step data

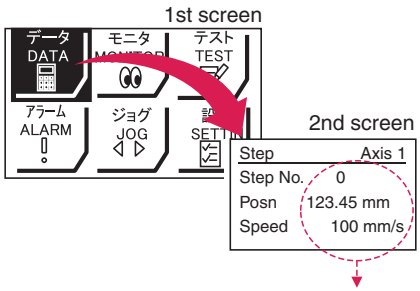

It can be registered by "SET" after entering the values.

Example of checking the operation status

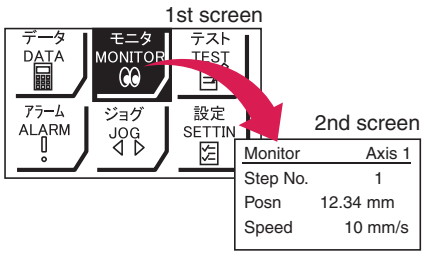

Operation status can be checked.

Teaching box screen

- **Data can be set with position and speed.** (Other conditions are already set.)

Step	Axis 1
Step No.	0
Posn	50.00 mm
Speed	200 mm/s

→

Step	Axis 1
Step No.	1
Posn	80.00 mm
Speed	100 mm/s

Gateway Unit Series LEC-G

- Unit linking the LECP6/LECA6 series and Fieldbus network
- Two methods of operation
  Step data input: Operate using preset step data in the controller.
  Numerical data input: The actuator operates using values such as position and speed from the PLC.

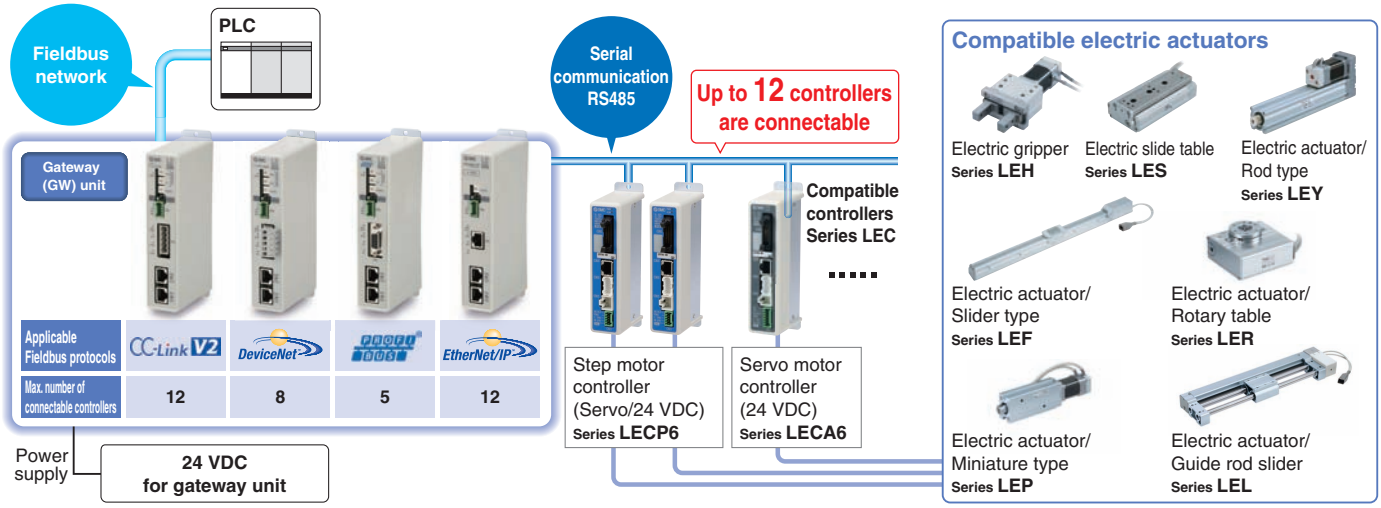

◎Normal Mode for Detailed Setting

Select normal mode when detailed setting is required.

- Step data can be set in detail.
- Parameters can be set.
- Signals and terminal status can be monitored.
- JOG and constant rate movement, return to origin, test operation and testing of forced output can be performed.

<When a PC is used>
Controller setting software

- Step data setting, parameter setting, monitor, teaching, etc., are indicated in different windows.

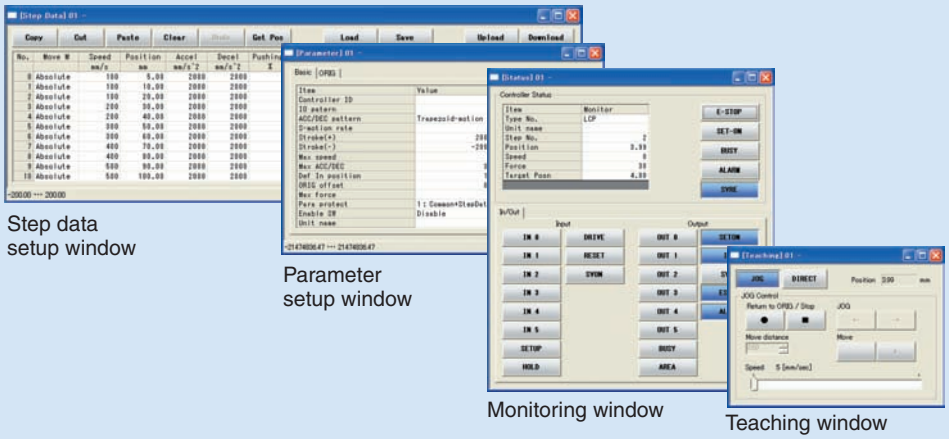

<When a TB (teaching box) is used>

- Multiple step data can be stored in the teaching box, and transferred to the controller.
- Continuous test operation by up to 5 step data.

Teaching box screen

- Each function (step data setting, test, monitor, etc.) can be selected from the main menu.

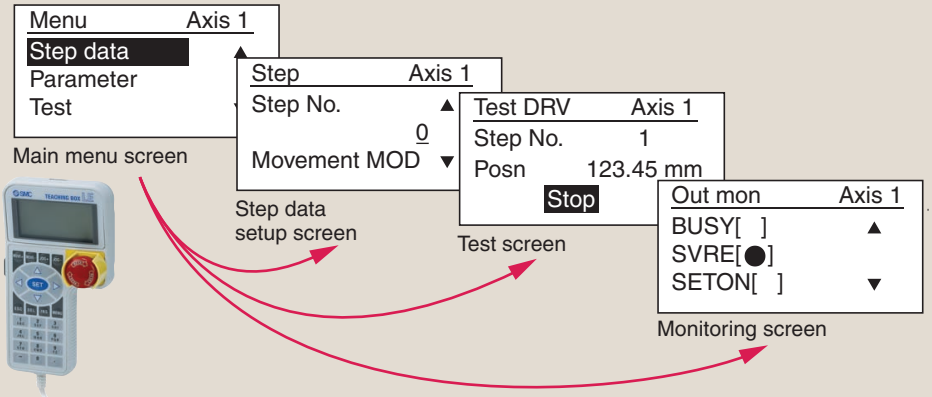

The actuator and controller are provided as a set. (They can be ordered separately.)

Confirm that the combination of the controller and the actuator is correct.

<Check the following before use.>

① Check the actuator label for model number. This matches the controller.

② Check Parallel I/O configuration matches (NPN or PNP).

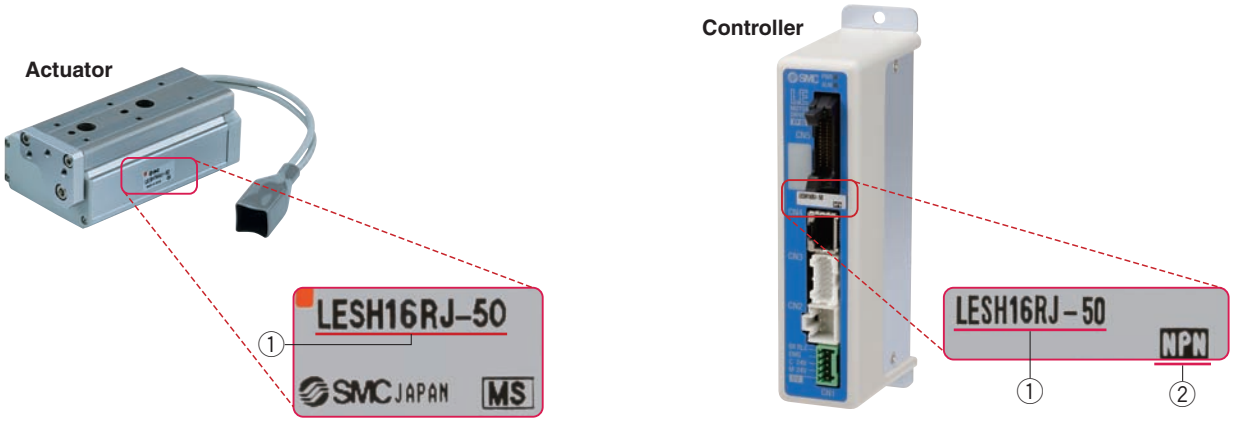

Programless Type Series LECP1

Step motor
(Servo/24 VDC)
LECP1

No programming

Capable of setting up an electric actuator operation without using a PC or teaching box

① Setting position number → **② Setting a stop position** → **③ Registration**

Setting a registered number for the stop position
Maximum 14 points

Moving the actuator to a stop position using FORWARD and REVERSE buttons

Registering the stop position using SET button

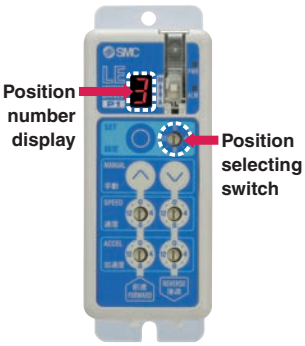

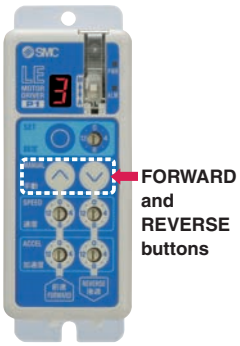

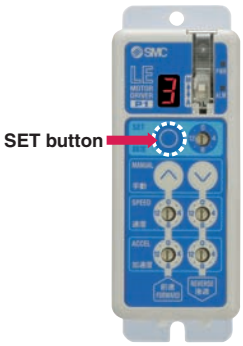

Speed/Acceleration 16-level adjustment

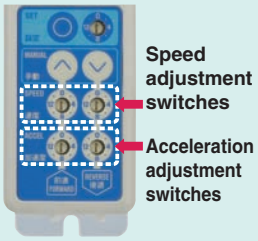

Pulse Input Type Series LECPA

- **A driver that uses pulse signals to allow positioning at any position. The actuator can be controlled from the customers' positioning unit.**

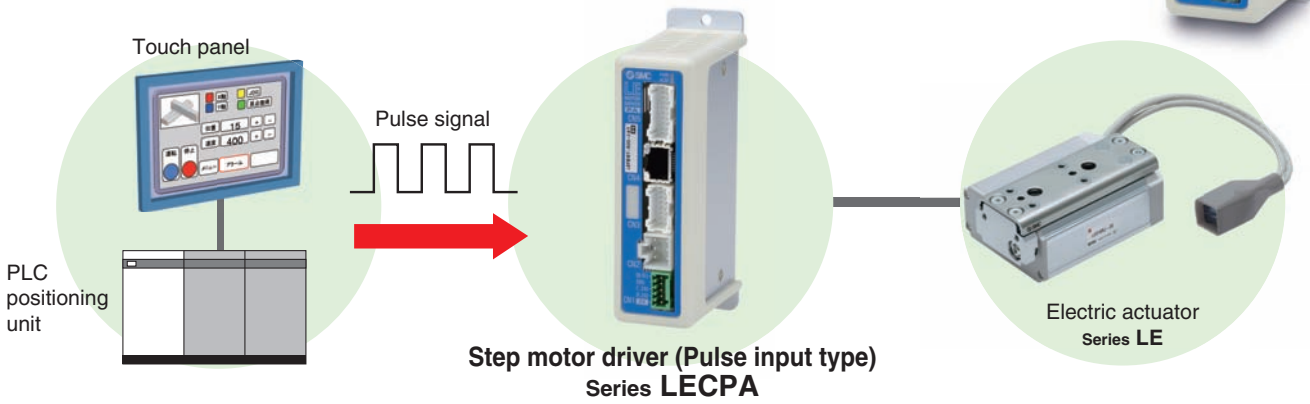

- **Return-to-origin command signal**
  Enables automatic return-to-origin action.

- **With force limit function (Pushing force/Gripping force operation available)**
  Pushing force/Positioning operation possible by switching signals.

Function

Item	Step data input type LECP6/LECA6	Programless type LECP1	Pulse input type LECPA
Step data and parameter setting	• Input from controller setting software (PC) • Input from teaching box	• Select using controller operation buttons	• Input from controller setting software (PC) • Input from teaching box
Step data "position" setting	• Input the numerical value from controller setting software (PC) or teaching box • Input the numerical value • Direct teaching • JOG teaching	• Direct teaching • JOG teaching	• No "position" setting required Position and speed set by pulse signal
Number of step data	64 points	14 points	—
Operation command (I/O signal)	Step No. [IN*] input ⇒ [DRIVE] input	Step No. [IN*] input only	Pulse signal
Completion signal	[INP] output	[OUT*] output	[INP] output

Setting Items

TB: Teaching box PC: Controller setting software

Item		Contents	Easy mode TB	Easy mode PC	Normal mode TB/PC	Step data input type LECP6/LECA6	Pulse input type LECPA	Programless type LECP1*
Step data setting (Excerpt)	Movement MOD	Selection of "absolute position" and "relative position"	△	●	●	Set at ABS/INC	No setting required	Fixed value (ABS)
	Speed	Transfer speed	●	●	●	Set in units of 1 mm/s		Select from 16-level
	Position	[Position]: Target position [Pushing]: Pushing start position	●	●	●	Set in units of 0.01 mm		Direct teaching JOG teaching
	Acceleration/Deceleration	Acceleration/deceleration during movement	●	●	●	Set in units of 1 mm/s²		Select from 16-level
	Pushing force	Rate of force during pushing operation	●	●	●	Set in units of 1%	Set in units of 1%	Select from 3-level (weak, medium, strong)
	Trigger LV	Target force during pushing operation	△	●	●	Set in units of 1%	Set in units of 1%	No setting required (same value as pushing force)
	Pushing speed	Speed during pushing operation	△	●	●	Set in units of 1 mm/s	Set in units of 1 mm/s	No setting required
	Moving force	Force during positioning operation	△	●	●	Set to 100%	Set to (Different values for each actuator)%	
	Area output	Conditions for area output signal to turn ON	△	●	●	Set in units of 0.01 mm	Set in units of 0.01 mm	
	In position	[Position]: Width to the target position [Pushing]: How much it moves during pushing	△	●	●	Set to 0.5 mm or more (Units: 0.01 mm)	Set to (Different values for each actuator) or more (Units: 0.01 mm)	
Parameter setting (Excerpt)	Stroke (+)	+ side limit of position	×	×	●	Set in units of 0.01 mm	Set in units of 0.01 mm	
	Stroke (–)	– side limit of position	×	×	●	Set in units of 0.01 mm	Set in units of 0.01 mm	
	ORIG direction	Direction of the return to origin can be set.	×	×	●	Compatible	Compatible	Compatible
	ORIG speed	Speed during return to origin position	×	×	●	Set in units of 1 mm/s	Set in units of 1 mm/s	No setting required
	ORIG ACC	Acceleration during return to origin position	×	×	●	Set in units of 1 mm/s²	Set in units of 1 mm/s	
Test	JOG		●	●	●	Continuous operation at the set speed can be tested while the switch is being pressed.	Continuous operation at the set speed can be tested while the switch is being pressed.	Hold down MANUAL button (⌃⌄) for uniform sending (speed is specified value)
	MOVE		×	●	●	Operation at the set distance and speed from the current position can be tested.	Operation at the set distance and speed from the current position can be tested.	Press MANUAL button (⌃⌄) once for sizing operation (speed, sizing amount are specified values)
	Return to ORIG		●	●	●	Compatible	Compatible	Compatible
	Test drive	Operation of the specified step data	●	●	● (Continuous operation)	Compatible	Not compatible	Compatible
	Forced output	ON/OFF of the output terminal can be tested.	×	×	●	Compatible	Compatible	Not compatible
Monitor	DRV mon	Current position, speed, force and the specified step data can be monitored.	●	●	●	Compatible	Compatible	
	In/Out mon	Current ON/OFF status of the input and output terminal can be monitored.	×	×	●	Compatible	Compatible	
ALM	Status	Alarm currently being generated can be confirmed.	●	●	●	Compatible	Compatible	Compatible (display alarm group)
	ALM Log record	Alarm generated in the past can be confirmed.	×	×	●	Compatible	Compatible	Not compatible
File	Save/Load	Step data and parameter can be saved, forwarded and deleted.	×	×	●	Compatible	Compatible	
Other	Language	Can be changed to Japanese or English.	●	●	●	Compatible	Compatible	

△: Can be set from TB Ver. 2.** (The version information is displayed on the initial screen)
* Programless type LECP1 cannot be used with the teaching box and controller setting kit.

System Construction/General Purpose I/O

●Electric slide table

Provided by customer

PLC

Power supply for I/O signal
24 VDC Note)

●I/O cable Pages 61, 74

Controller type	Part no.
LECP6/LECA6	LEC-CN5-□
LECP1 (Programless)	LEC-CK4-□

●Controller* Page 52

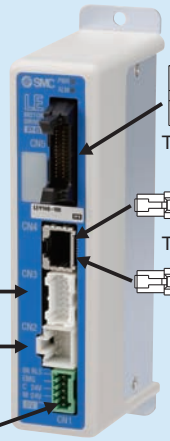

To CN5

To CN4

To CN3

To CN2

To CN1

Step data input type
LECP6/LECA6
Page 53

Programless type
LECP1
Page 68

Note) The teaching box, controller setting kit and Touch Operator Interface cannot be connected.

Provided by customer

Power supply for controller
24 VDC Note)

Note) When conformity to UL is required, the electric actuator and controller should be used with a UL1310 Class 2 power supply.

●Power supply plug
(Accessory)
<Applicable cable size>
AWG20 (0.5 mm²)

●Touch Operator Interface (Provided by customer)
GP4501T/GP3500T
Manufactured by Digital Electronics Corp.

Pro-face
for the best interface

Cockpit parts can be downloaded free via the Pro-face website. Using cockpit parts makes adjustment from the Touch Operator Interface possible.

●Actuator cable* Pages 59, 73

Controller type	Standard cable	Robotic cable
LECP6 (Step data input type)	LE-CP-□-S	LE-CP-□
LECA6 (Step data input type)	—	LE-CA-□
LECP1 (Programless type)	LE-CP-□-S	LE-CP-□

The * mark: Can be included in the "How to Order" for the actuator.

Option

●Teaching box Page 63
(With 3 m cable)
Part no.: LEC-T1-3JG□

Or

●Controller setting kit Page 62
Controller setting kit
(Communication cable, conversion unit and USB cable are included.)
Part no.: LEC-W2

Communication cable
(3 m)

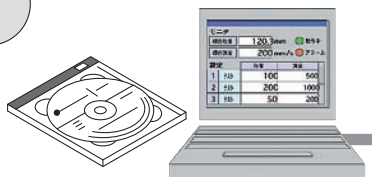

PC

●USB cable
(A-miniB type)
(0.3 m)

Note) Cannot be used with the programless type (LECP1).

System Construction/Pulse Signal

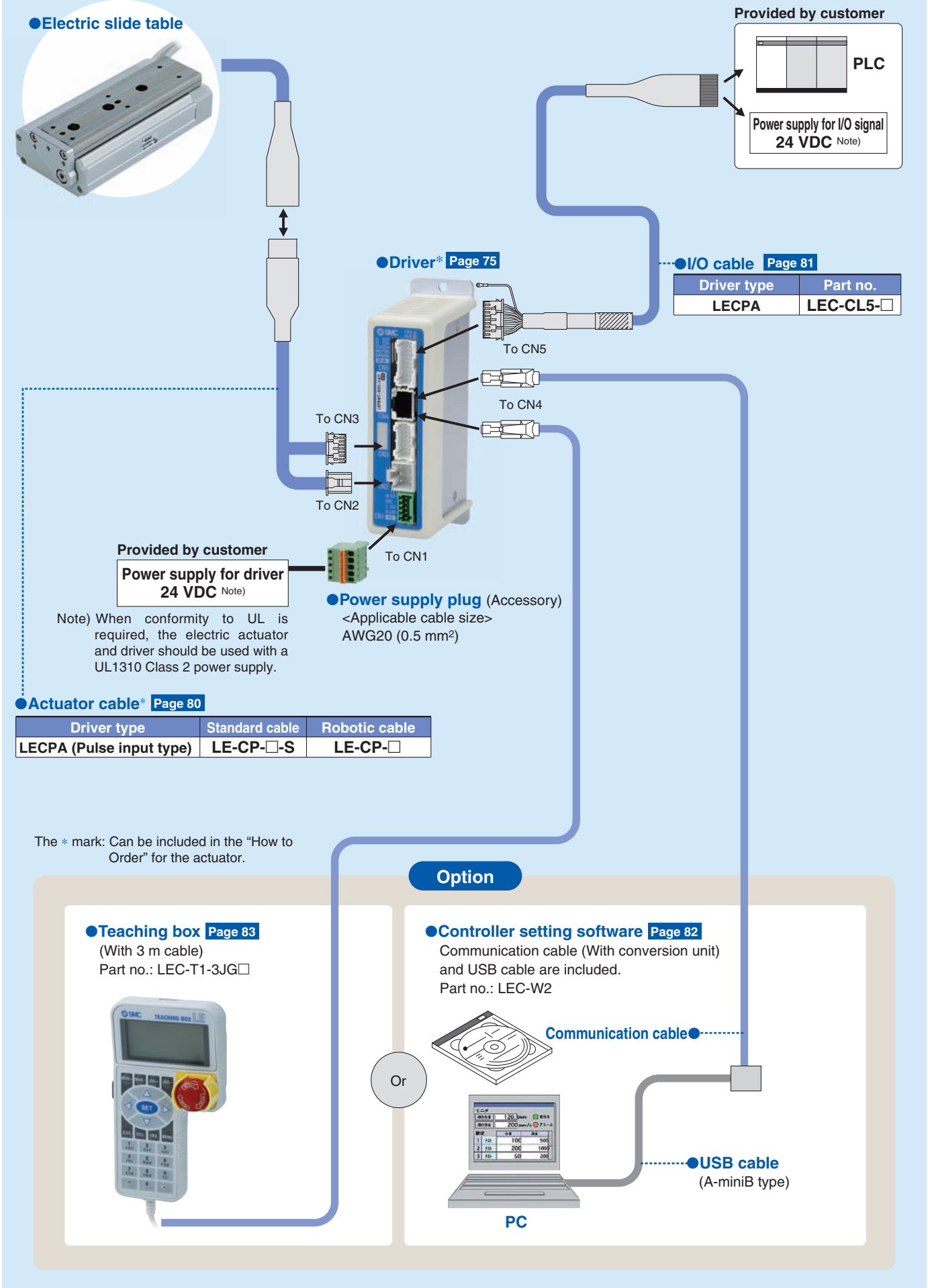

Driver type	Part no.
LECPA	LEC-CL5-□

Driver type	Standard cable	Robotic cable
LECPA (Pulse input type)	LE-CP-□-S	LE-CP-□

System Construction/Fieldbus Network

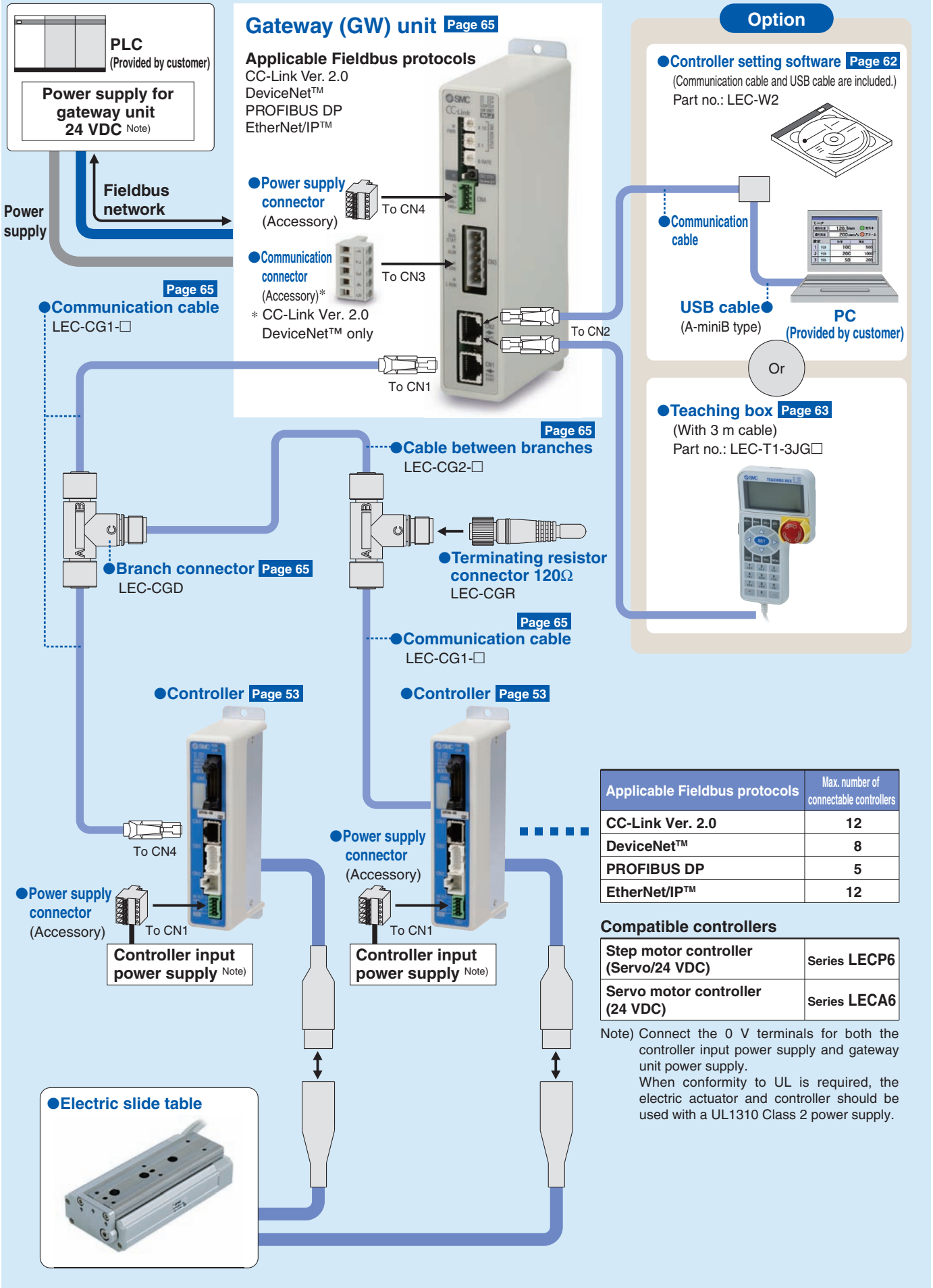

Applicable Fieldbus protocols	Max. number of connectable controllers
CC-Link Ver. 2.0	12
DeviceNet™	8
PROFIBUS DP	5
EtherNet/IP™	12

Compatible controllers

Step motor controller (Servo/24 VDC)	Series LECP6
Servo motor controller (24 VDC)	Series LECA6

Note) Connect the 0 V terminals for both the controller input power supply and gateway unit power supply.
When conformity to UL is required, the electric actuator and controller should be used with a UL1310 Class 2 power supply.

SMC Electric Actuators

Slider Type (Step Motor (Servo/24 VDC) / Servo Motor (24 VDC) / AC Servo Motor)

CAT.ES100-87

Ball screw drive
Series **LEFS**

Clean room compatible

Series **LEFS**

Size	Max. work load (kg)	Stroke (mm)
16	10	Up to 400
25	20	Up to 600
32	45	Up to 800
40	60	Up to 1000

Belt drive
Series **LEFB**

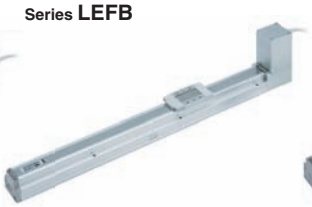

Series **LEFB**

Size	Max. work load (kg)	Stroke (mm)
16	1	Up to 1000
25	5	Up to 2000
32	14	Up to 2000

Ball screw drive
Series **LEFS**

Clean room compatible

Series **LEFS**

Size	Max. work load (kg)	Stroke (mm)
25	20	Up to 600
32	45	Up to 800
40	60	Up to 1000

Belt drive
Series **LEFB**

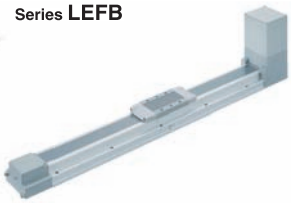

Series **LEFB**

Size	Max. work load (kg)	Stroke (mm)
25	5	Up to 2000
32	15	Up to 2500
40	25	Up to 3000

High Rigidity Slider Type (AC Servo Motor)

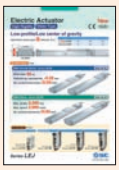

CAT.ES100-104

Ball screw drive
Series **LEJS**

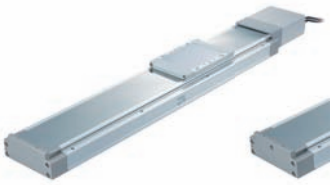

Series **LEJS**

Size	Max. work load (kg)	Stroke (mm)
40	55	200 to 1200
63	85	300 to 1500

Belt drive
Series **LEJB**

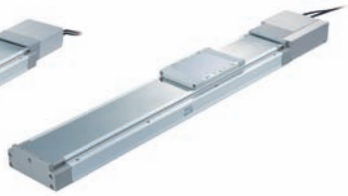

Series **LEJB**

Size	Max. work load (kg)	Stroke (mm)
40	20	200 to 2000
63	30	300 to 3000

Guide Rod Slider (Step Motor (Servo/24 VDC))

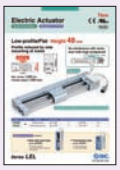

CAT.ES100-101

Belt drive
Series **LEL**

Series **LEL25M**
Sliding bearing

Size	Max. work load (kg)	Stroke (mm)
25	3	Up to 1000

Series **LEL25L**
Ball bushing bearing

Size	Max. work load (kg)	Stroke (mm)
25	5	Up to 1000

Rod Type (Step Motor (Servo/24 VDC) / Servo Motor (24 VDC))

CAT.ES100-83

Basic type
Series **LEY**

Dust/Drip proof compatible

Series **LEY**

Size	Pushing force (N)	Stroke (mm)
16	141	Up to 300
25	452	Up to 400
32	707	Up to 500
40	1058	Up to 500

In-line motor type
Series **LEY□D**

Dust/Drip proof compatible

Guide rod type
Series **LEYG**

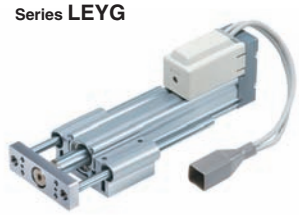

Series **LEYG**

Size	Pushing force (N)	Stroke (mm)
16	141	Up to 200
25	452	Up to 300
32	707	Up to 300
40	1058	Up to 300

Guide rod type /In-line motor type
Series **LEYG□D**

AC Servo Motor

Basic type
Series **LEY**

Dust/Drip proof compatible

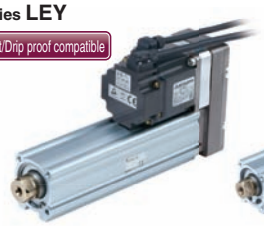

Series **LEY**

Size	Pushing force (N)	Stroke (mm)
25	485	Up to 400
32	588	Up to 500

In-line motor type
Series **LEY□D**

Dust/Drip proof compatible

Series **LEY**

Size	Pushing force (N)	Stroke (mm)
25	485	Up to 400
32	736	Up to 500
63	1910	Up to 800

Guide rod type
Series **LEYG**

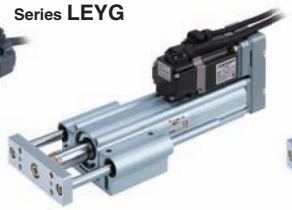

Series **LEYG**

Size	Pushing force (N)	Stroke (mm)
25	485	300
32	588	

Guide rod type /In-line motor type
Series **LEYG□D**

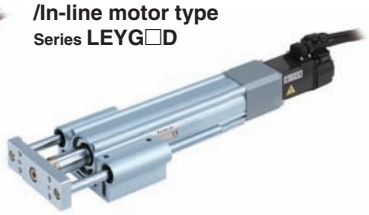

Series **LEYG**

Size	Pushing force (N)	Stroke (mm)
25	485	300
32	736	

SMC Electric Actuators

Slide Table (Step Motor (Servo/24 VDC)) (Servo Motor (24 VDC))

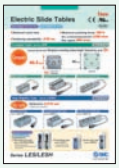

CAT.ES100-78

Compact type Series LES

Basic type/R type
Series LES□R

Size	Max. work load (kg)	Stroke (mm)
8	1	30, 50, 75
16	3	30, 50 75, 100
25	5	30, 50, 75 100, 125, 150

Symmetrical type/L type
Series LES□L

In-line motor type/D type
Series LES□D

High rigidity type Series LESH

Basic type/R type
Series LESH□R

Size	Max. work load (kg)	Stroke (mm)
8	2	50, 75
16	6	50, 100
25	9	50, 100 150

Symmetrical type/L type
Series LESH□L

In-line motor type/D type
Series LESH□D

Miniature (Step Motor (Servo/24 VDC))

CAT.ES100-92

Rod type
Series LEPY

Series LEPY

Size	Max. work load (kg)	Stroke (mm)
6	1	25, 50, 75
10	2	

Slide table type
Series LEPS

Series LEPS

Size	Max. work load (kg)	Stroke (mm)
6	1	25
10	2	50

Rotary Table (Step Motor (Servo/24 VDC))

CAT.ES100-94

Basic type
Series LER

High precision type
Series LERH

Series LER

Size	Rotating torque (N·m)		Max. speed (°/s)	
	Basic	High torque	Basic	High torque
10	0.2	0.3	420	280
30	0.8	1.2		
50	6.6	10		

Gripper (Step Motor (Servo/24 VDC))

CAT.ES100-77

2-finger type
Series LEHZ

Series LEHZ

Size	Max. gripping force (N)		Stroke/both sides (mm)
	Basic	Compact	
10	14	6	4
16		8	6
20	40	28	10
25			14
32	130	—	22
40	210	—	30

2-finger type
With dust cover
Series LEHZJ

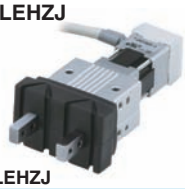

Series LEHZJ

Size	Max. gripping force (N)		Stroke/both sides (mm)
	Basic	Compact	
10	14	6	4
16		8	6
20	40	28	10
25			14

2-finger type
Long stroke
Series LEHF

Series LEHF

Size	Max. gripping force (N)	Stroke/both sides (mm)
10	7	16 (32)
20	28	24 (48)
32	120	32 (64)
40	180	40 (80)

Note) ( ): Long stroke

3-finger type
Series LEHS

Series LEHS

Size	Max. gripping force (N)		Stroke/both sides (mm)
	Basic	Compact	
10	5.5	3.5	4
20	22	17	6
32	90	—	8
40	130	—	12

Controller/Driver

Controller

Step data input type For step motor
Series **LECP6**

Control motor
Step motor (Servo/24 VDC)

Step data input type For servo motor
Series **LECA6**

Control motor
Servo motor (24 VDC)

Programless type
Series **LECP1**

Control motor
Step motor (Servo/24 VDC)

Driver

Pulse input type
Series **LECPA**

Control motor
Step motor (Servo/24 VDC)

Gateway Unit

Fieldbus-compatible gateway (GW) unit
Series **LEC-G**




Applicable Fieldbus protocols	CC-Link V2	DeviceNet	PROFIBUS	EtherNet/IP
Max. number of connectable controllers	12	8	5	12

Driver

AC Servo Motor Driver

Pulse input type/ Positioning type
Series **LECSA**
(Incremental type)

Control motor
AC servo motor (100/200/400 W)

Pulse input type
Series **LECSB**
(Absolute type)

Control motor
AC servo motor (100/200/400 W)

CC-Link direct input type
Series **LECSC**
(Absolute type)

Control motor
AC servo motor (100/200/400 W)

SSCNET III type
Series **LECSS**
(Absolute type)

Control motor
AC servo motor (100/200/400 W)

Series Variations

Electric Slide Table/Compact Type *Series LES*

Basic type/
R Type

Symmetrical
type/L Type

In-line motor type/D Type

Specifications	Series	Stroke (mm)	Work load (kg)		Speed (mm/s)	Screw lead (mm)	Controller /Driver series	Reference page
			Horizontal	Vertical				
Step motor (Servo/24 VDC)	LES8□	30, 50, 75	1	0.5	10 to 200	4	Series LECP6	Page 1
			1	0.25	20 to 400	8		
	LES16□	30, 50 75, 100	3	3	10 to 200	5	Series LECP1	
			3	1.5	20 to 400	10		
	LES25□	30, 50, 75 100, 125, 150	5	5	10 to 200	8	Series LECPA	
			5	2.5	20 to 400	16		
Servo motor (24 VDC)	LES8□A	30, 50, 75	1	1	10 to 200	4	Series LECA6	
			1	0.5	20 to 400	8		
	LES16□A	30, 50 75, 100	3	3	10 to 200	5		
			3	1.5	20 to 400	10		
	LES25$^{R}_{L}$A	30, 50, 75 100, 125, 150	5	4	10 to 200	8		
			5	2	20 to 400	16		

Electric Slide Table/High Rigidity Type *Series LESH*

Basic type/
R type

Symmetrical type/
L type

In-line motor type/D type

Specifications	Series	Stroke (mm)	Work load (kg)		Speed (mm/s)	Screw lead (mm)	Controller /Driver series	Reference page
			Horizontal	Vertical				
Step motor (Servo/24 VDC)	LESH8□	50, 75	2	0.5	10 to 200	4	Series LECP6	Page 25
			1	0.25	20 to 400	8		
	LESH16□	50, 100	6	2	10 to 200	5	Series LECP1	
			4	1	20 to 400	10		
	LESH25□	50, 100 150	9	4	10 to 150	8	Series LECPA	
			6	2	20 to 400	16		
Servo motor (24 VDC)	LESH8□A	50, 75	2	0.5	10 to 200	4	Series LECA6	
			1	0.25	20 to 400	8		
	LESH16□A	50, 100	5	2	10 to 200	5		
			2.5	1	20 to 400	10		
	LESH25$^{R}_{L}$A	50, 100 150	6	2.5	10 to 150	8		
			4	1.5	20 to 400	16		

Controller/Driver *LEC*

LECP6

LECA6

LECP1

LECPA

Type	Series	Compatible motor	Power supply voltage	Parallel I/O		Number of positioning pattern points	Reference page
				Input	Output		
Step data input type	LECP6	Step motor (Servo/24 VDC)	24 VDC ±10%	11 inputs (Photo-coupler isolation)	13 outputs (Photo-coupler isolation)	64	Page 52
	LECA6	Servo motor (24 VDC)					
Programless type	LECP1	Step motor (Servo/24 VDC)	24 VDC ±10%	6 inputs (Photo-coupler isolation)	6 outputs (Photo-coupler isolation)	14	
Pulse input type	LECPA	Step motor (Servo/24 VDC)	24 VDC ±10%	5 inputs (Photo-coupler isolation)	9 outputs (Photo-coupler isolation)	—	

INDEX

Step Motor (Servo/24 VDC)/Servo Motor (24 VDC) Type

◎Electric Slide Table/Compact Type Series LES

◎Electric Slide Table/High Rigidity Type Series LESH

◎Step Motor (Servo/24 VDC)/Servo Motor (24 VDC) Controller/Driver

Electric Slide Table/Compact Type Step Motor (Servo/24 VDC) Servo Motor (24 VDC)

Series LES
Model Selection 1

Selection Procedure

For the high rigidity type LESH series, refer to page 25.

Step 1 Check the work load–speed. → **Step 2** Check the cycle time. → **Step 3** Check the allowable moment.

Selection Example

Step 1 Check the work load–speed. <Speed–Work load graph> (Page 2)

Select the target model based on the workpiece mass and speed with reference to the <Speed–Work load graph>.

Selection example) The **LES16□J-50** is temporarily selected based on the graph shown on the right side.

Step 2 Check the cycle time.

It is possible to obtain an approximate cycle time by using method 1, but if a more detailed cycle time is required, use method 2.

Method 1: Check the cycle time graph. (Page 3)

Method 2: Calculation <Speed–Work load graph> (Page 2)

Calculate the cycle time using the following calculation method.

Cycle time:

T can be found from the following equation.

$$T = T1 + T2 + T3 + T4 \text{ [s]}$$

- T1: Acceleration time and T3: Deceleration time can be obtained by the following equation.

$$T1 = V/a1 \text{ [s]} \qquad T3 = V/a2 \text{ [s]}$$

- T2: Constant speed time can be found from the following equation.

$$T2 = \frac{L - 0.5 \cdot V \cdot (T1 + T3)}{V} \text{ [s]}$$

- T4: Settling time varies depending on the conditions such as motor types, load and in positioning of the step data. Therefore, please calculate the settling time with reference to the following value.

$$T4 = 0.15 \text{ [s]}$$

Calculation example)

T1 to T4 can be calculated as follows.

$$T1 = V/a1 = 220/5000 = 0.04 \text{ [s]},$$

$$T3 = V/a2 = 220/5000 = 0.04 \text{ [s]}$$

$$T2 = \frac{L - 0.5 \cdot V \cdot (T1 + T3)}{V}$$

$$= \frac{50 - 0.5 \cdot 220 \cdot (0.04 + 0.04)}{220}$$

$$= 0.19 \text{ [s]}$$

$$T4 = 0.15 \text{ [s]}$$

Therefore, the cycle time can be obtained as follows.

$$T = T1 + T2 + T3 + T4$$
$$= 0.04 + 0.19 + 0.04 + 0.15$$
$$= \mathbf{0.42\ [s]}$$

Step 3 Check the allowable moment. <Static allowable moment> (Page 3) <Dynamic allowable moment> (Page 4)

Confirm the moment that applies to the actuator is within the allowable range for both static and dynamic conditions.

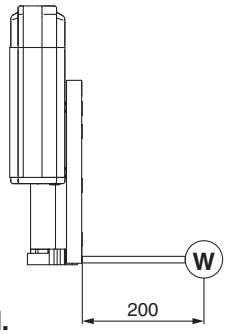

Based on the above calculation result, the LES16□J-50 is selected.

Operating conditions

- Workpiece mass: 1 [kg]
- Speed: 220 [mm/s]
- Mounting orientation: Vertical
- Stroke: 50 [mm]
- Acceleration/Deceleration: 5,000 [mm/s²]
- Cycle time: 0.5 seconds
- Workpiece mounting condition:

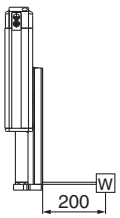

LES16□/Step Motor Vertical

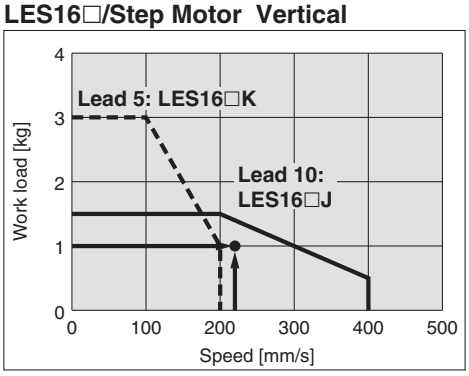

<Speed–Work load graph>

LES16□/Step Motor

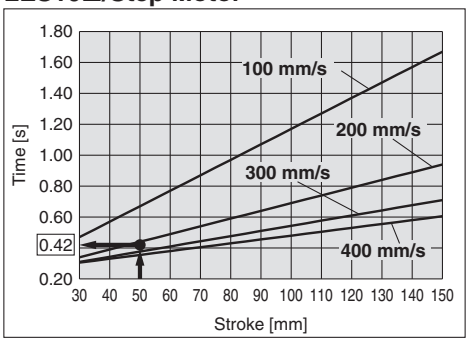

<Cycle time>

LES16/Pitching

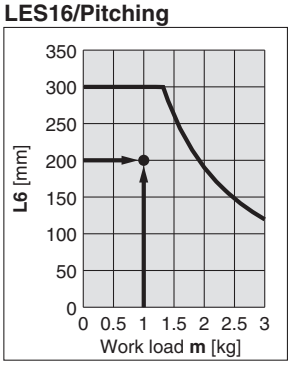

<Dynamic allowable moment>

Speed–Work Load Graph (Guide)

Step Motor (Servo/24 VDC)

∗ The following graph shows the values when moving force is 100%.

LES8□

Horizontal

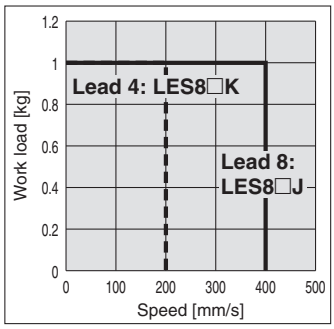

Vertical

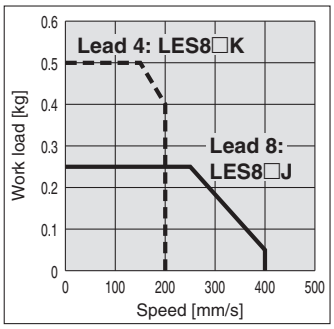

LES16□

Horizontal

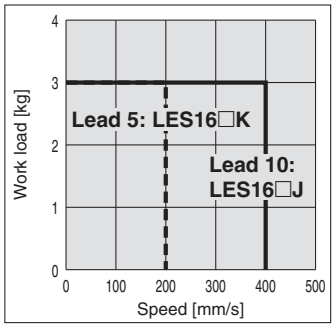

Vertical

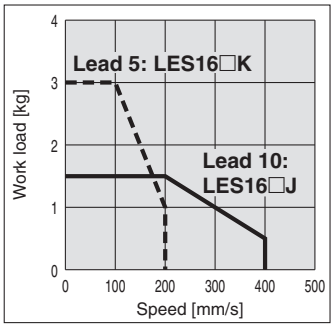

LES25□

Horizontal

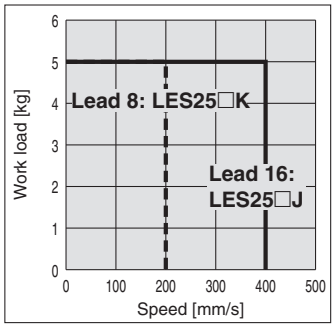

Vertical

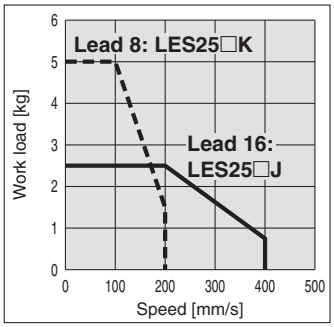

Servo Motor (24 VDC)

∗ The following graph shows the values when moving force is 250%.

LES8□A

Horizontal

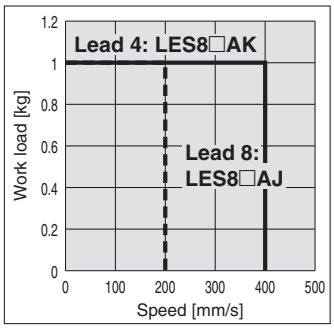

Vertical

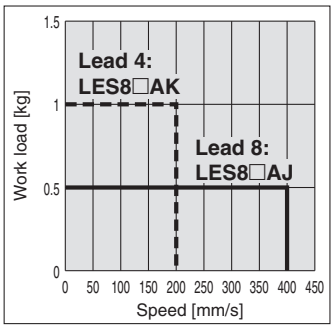

LES16□A

Horizontal

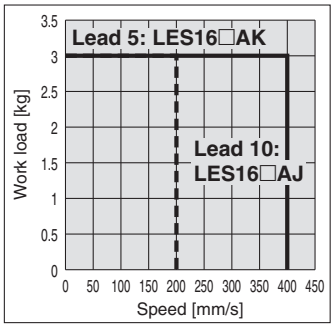

Vertical

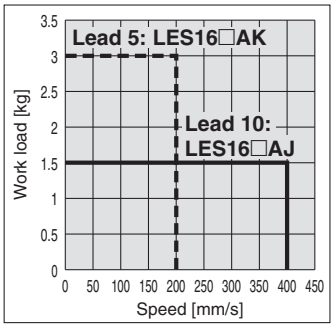

LES25$^{R}_{L}$A

Horizontal

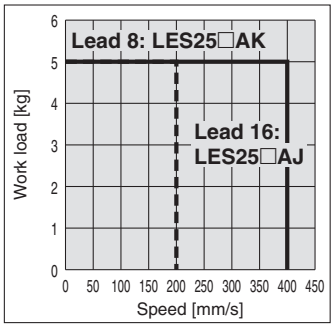

Vertical

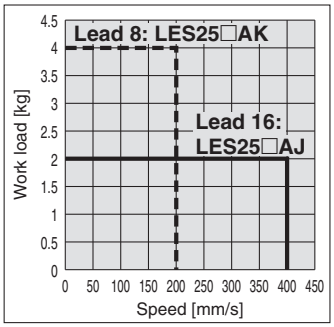

Cycle Time (Guide)

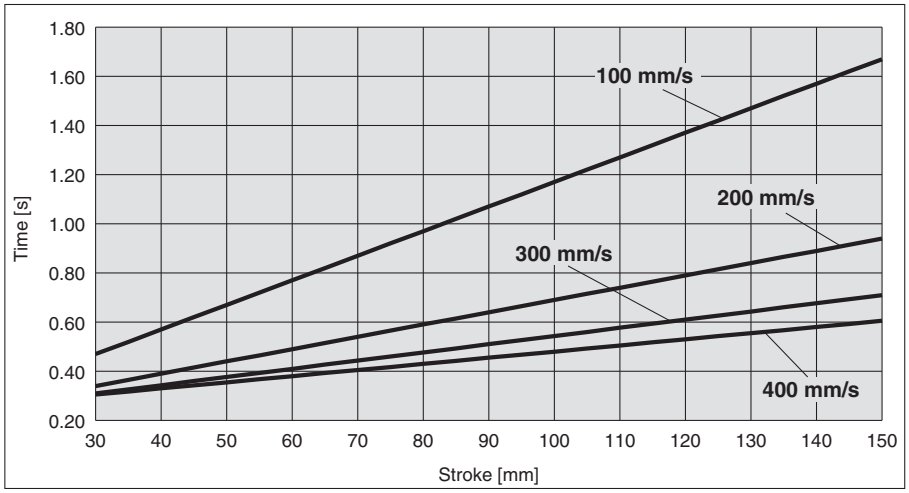

Operating Conditions
Acceleration/Deceleration: 5,000 mm/s^2
In position: 0.5

Static Allowable Moment

Model		LES8	LES16	LES25
Pitching	[N·m]	2	4.8	14.1
Yawing	[N·m]	2	4.8	14.1
Rolling	[N·m]	0.8	1.8	4.8

Dynamic Allowable Moment

Note 1) This graph shows the amount of allowable overhang when the center of gravity of the workpiece overhangs in one direction. When the center of gravity of the workpiece overhangs in two directions, refer to the Electric Actuator Selection Software for confirmation.
Note 2) For static moment as well, use a product below the range in the graph. http://www.smcworld.com

Acceleration/Deceleration —— 5,000 mm/s²

Orientation	Load overhanging direction **m** : Work load [kg] **Me**: Dynamic allowable moment [N·m] **L** : Overhang to the work load center of gravity [mm]		Model		
			LES8	**LES16**	**LES25**
Horizontal	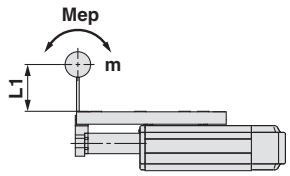	Pitching	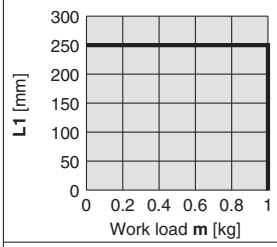	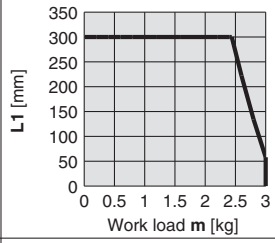	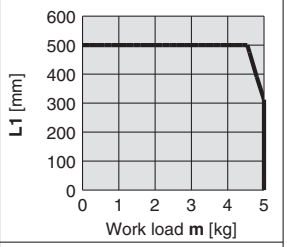
	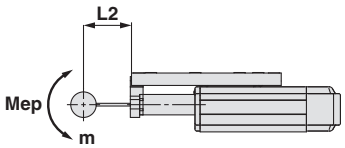		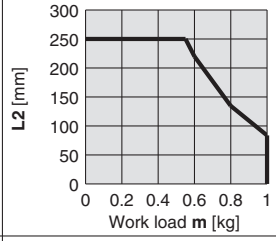	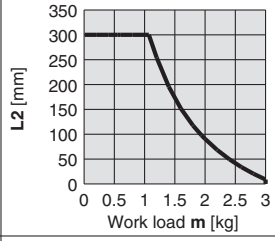	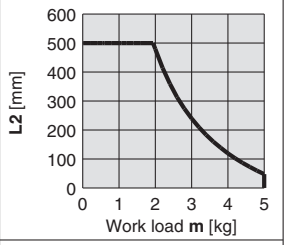
	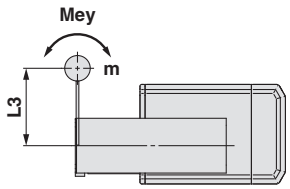	Yawing	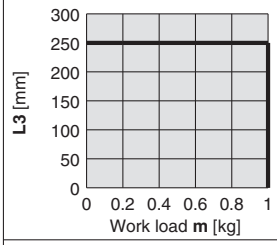	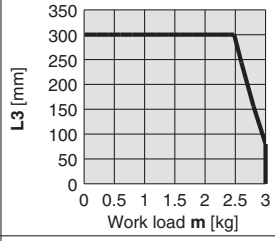	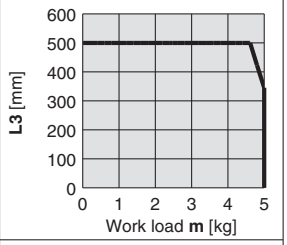
	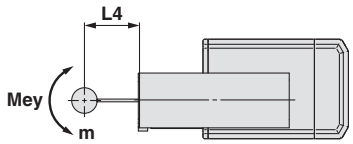		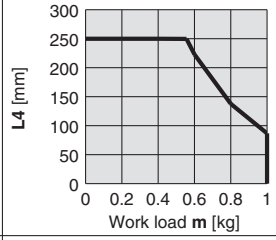	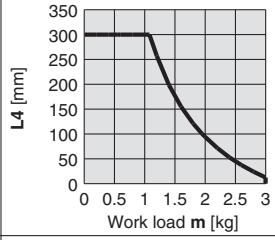	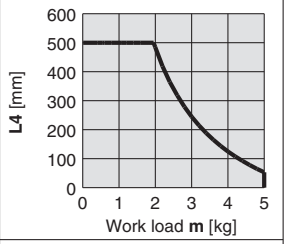
	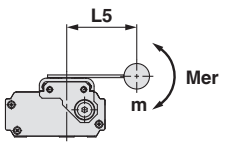	Rolling	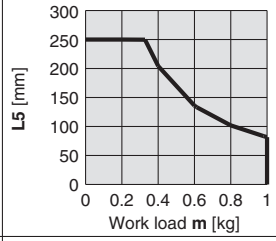	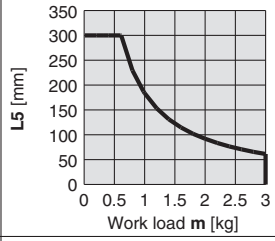	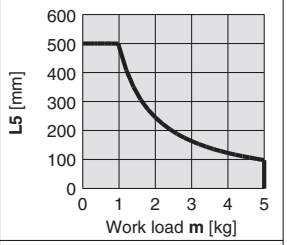
Vertical	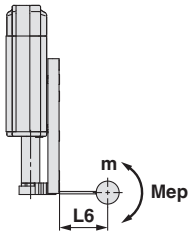	Pitching	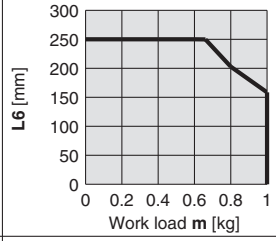	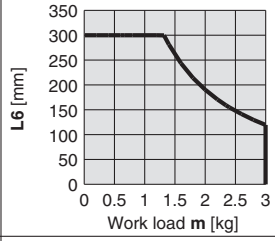	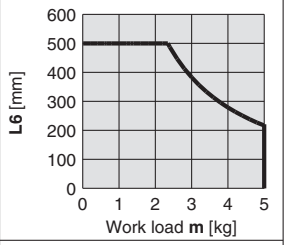
	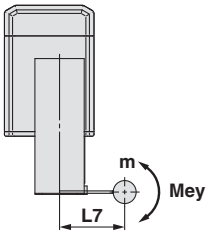	Yawing	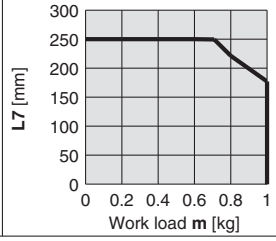	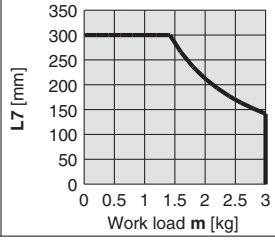	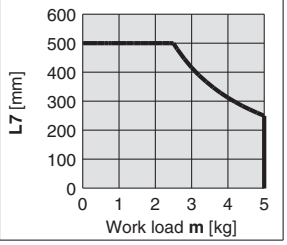

Model Selection 2

Selection Procedure

For the high rigidity type LESH series, refer to page 29.

Step 1 Check the required force. → **Step 2** Check the set value of pushing force. → **Step 3** Check the duty ratio.

Selection Example

Operating conditions

- Pushing force: 90 [N]
- Workpiece mass: 1 [kg]
- Speed: 100 [mm/s]
- Stroke: 100 [mm]
- Mounting orientation: Vertical upward
- Pushing time + Operation (A): 1.5 seconds
- All cycle time (B): 6 seconds

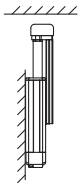

Step 1 Check the required force.

Calculate the approximate required force for pushing operation.

Selection example)
- Pushing force: 90 [N]
- Workpiece mass: 1 [kg]

Therefore, the approximate required force can be obtained as 90 + 10 = 100 [N].

Select the target model based on the approximate required force with reference to the specifications (Pages 11 and 12).

Selection example) Based on the specifications,
- Approximate required force: 100 [N]
- Speed: 100 [mm/s]

Therefore, the **LES25□** is temporarily selected.

Then, calculate the required force for pushing operation.

If the mounting position is vertical upward, add the actuator table weight.

Selection example) Based on the <Table weight>,
- **LES25□** table weight: 0.5 [kg]

Therefore, the required force can be obtained as 100 + 5 = 105 [N].

Step 2 Check the set value of pushing force.

<Set value of pushing force–Force graph> (Page 6)

Select the target model based on the required force with reference to the <Set value of pushing force–Force graph>, and confirm the set value of pushing force.

Selection example) Based on the graph shown on the right side,
- Required force: 105 [N]

Therefore, the **LES25□K** is temporarily selected.

This set value of pushing force is 40 [%].

Step 3 Check the duty ratio.

Confirm the allowable duty ratio based on the set value of pushing force with reference to the <Allowable duty ratio>.

Selection example) Based on the <Allowable duty ratio>,
- Set value of pushing force: 40 [%]

Therefore, the allowable duty ratio can be obtained as 30 [%].

Calculate the duty ratio for operating conditions, and confirm it does not exceed the allowable duty ratio.

Selection example)
- Pushing time + Operation (A): 1.5 seconds
- All cycle time (B): 6 seconds

Therefore, the duty ratio can be obtained as 1.5/6 x 100 = 25 [%], and this is the allowable range.

Table Weight [kg]

Model	Stroke [mm]					
	30	50	75	100	125	150
LES8	0.06	0.08	0.10	—	—	—
LES16	0.10	0.13	0.18	0.20	—	—
LES25	0.25	0.30	0.36	0.50	0.55	0.59

∗ If the mounting position is vertical upward, add the table weight.

LES25□/Step Motor

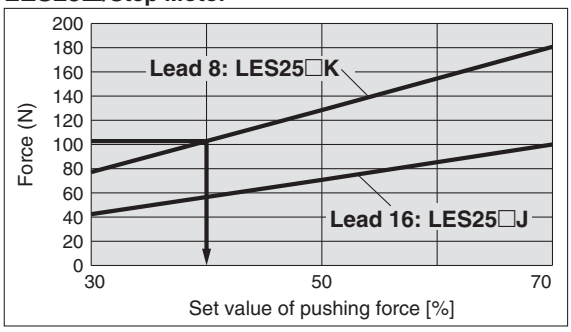

<Set value of pushing force–Force graph>

Allowable Duty Ratio

Step Motor (Servo/24 VDC)

Set value of pushing force (%)	Duty ratio (%)	Continuous pushing time (minute)
30	—	—
50 or less	30 or less	5 or less
70 or less	20 or less	3 or less

Servo Motor (24 VDC)

Set value of pushing force (%)	Duty ratio (%)	Continuous pushing time (minute)
50	—	—
75 or less	30 or less	5 or less
100 or less	20 or less	3 or less

∗ The pushing force of the LES8□A is up to 75%.

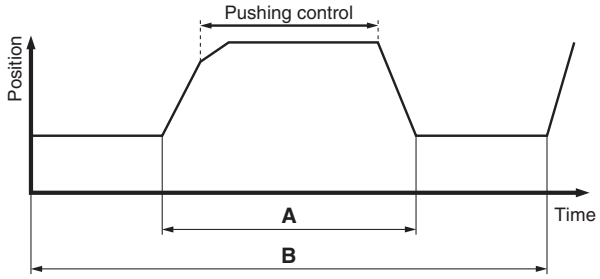

Based on the above calculation result, the LES25□K-100 is selected.

For allowable moment, the selection procedure is the same as the positioning control.

Set Value of Pushing Force–Force Gragh

Step Motor (Servo/24 VDC)

LES8□

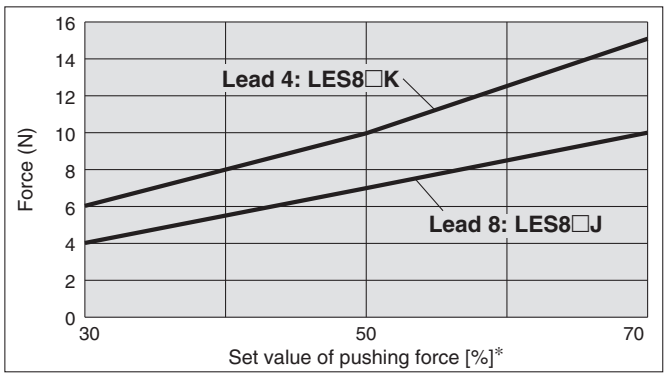

LES16□

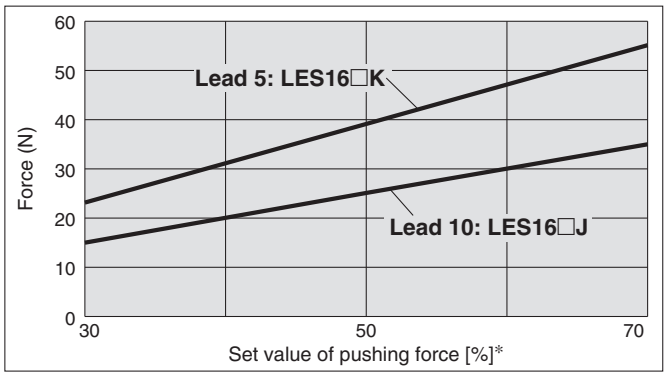

LES25□

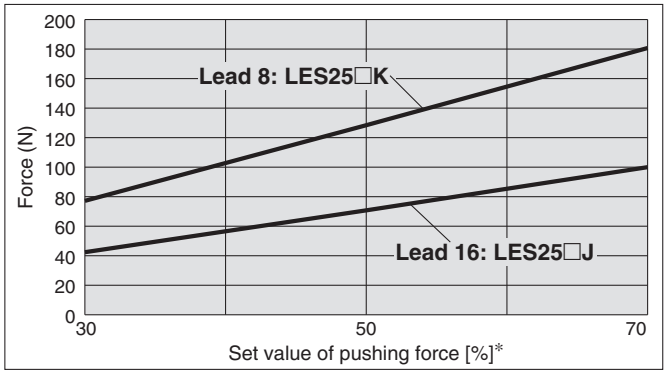

Servo Motor (24 VDC)

LES8□A

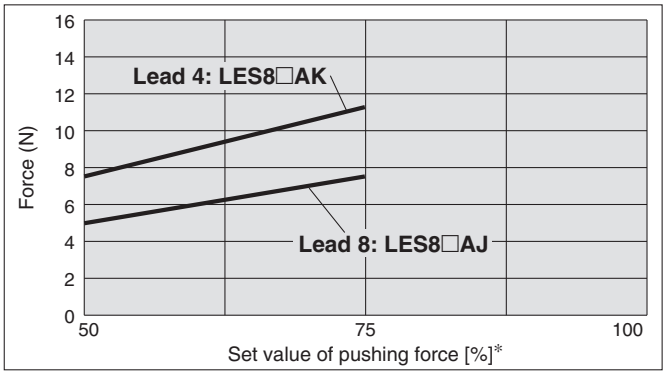

LES16□A

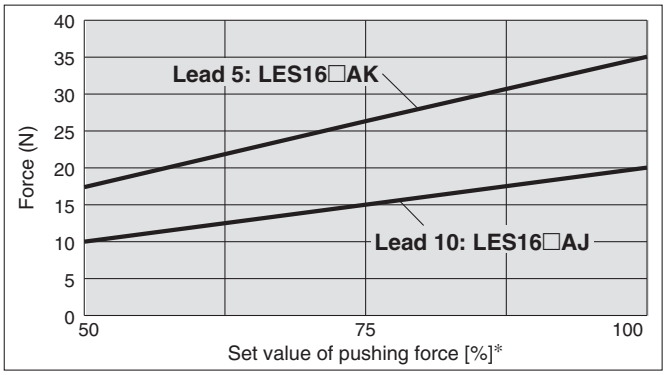

LES25$^{R}_{L}$A

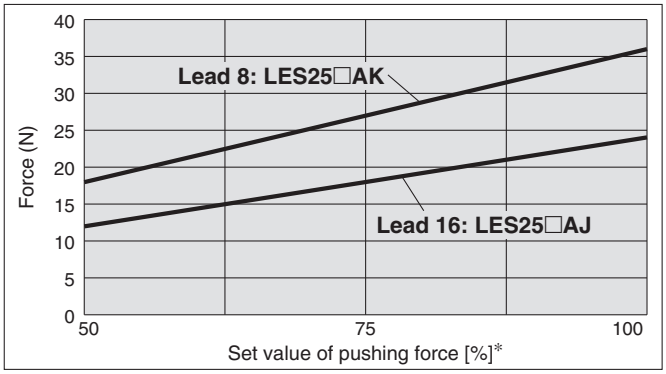

∗ Set values for the controller.

Table Accuracy

∗ These values are initial guideline values.

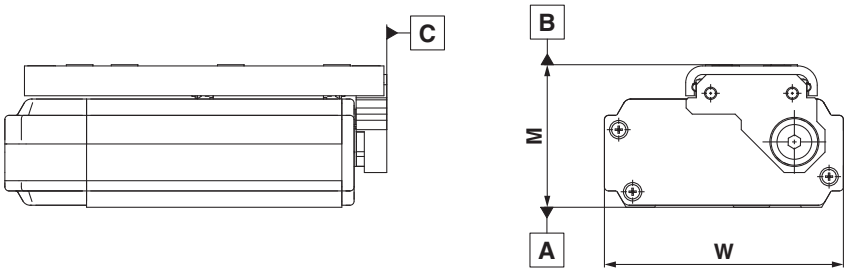

Model	LES8	LES16	LES25
B side parallelism to A side	0.4 mm		
B side traveling parallelism to A side	Refer to Graph 1.		
C side perpendicularity to A side	0.2 mm		
M dimension tolerance	±0.3 mm		
W dimension tolerance	±0.2 mm		

Graph 1 B side traveling parallelism to A side

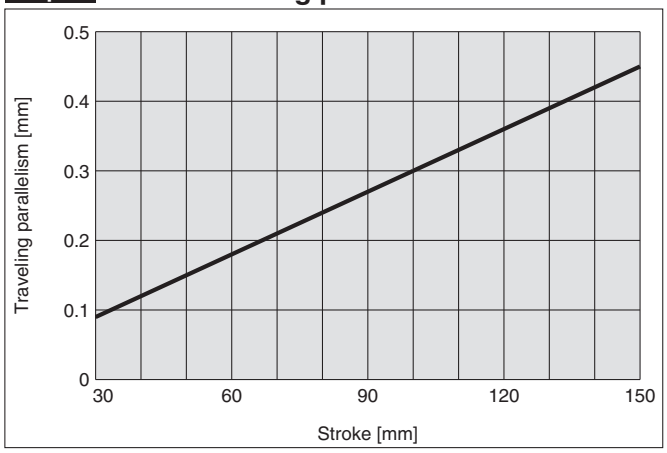

Traveling parallelism:
The amount of deflection on a dial gauge when the table travels a full stroke with the body secured on a reference base surface

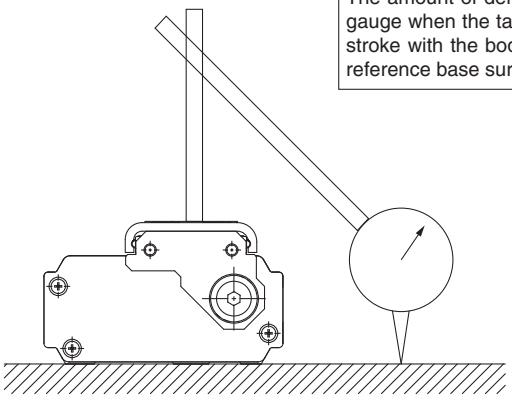

Table Deflection (Reference Value)

∗ These values are initial guideline values.

Pitching moment

Table displacement due to pitch moment load
Table displacement when loads are applied to the section marked with the arrow with the slide table stuck out.

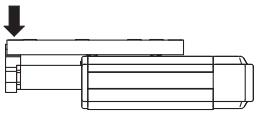

LES8

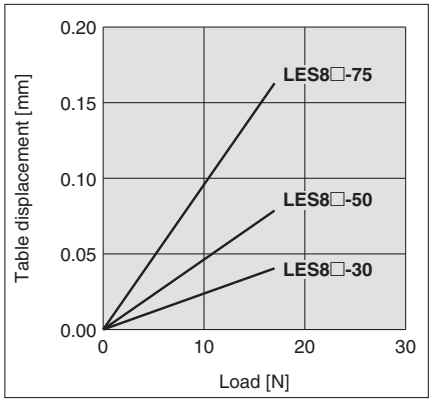

LES16

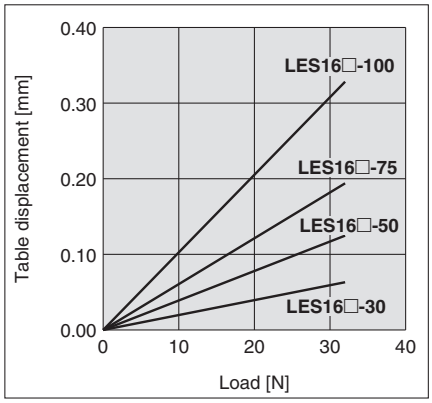

LES25

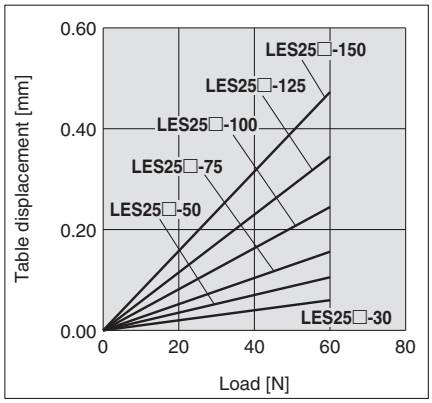

Yawing moment

Table displacement due to yaw moment load
Table displacement when loads are applied to the section marked with the arrow with the slide table stuck out.

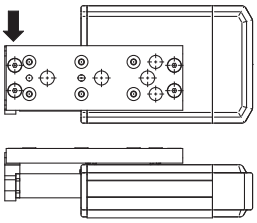

LES8

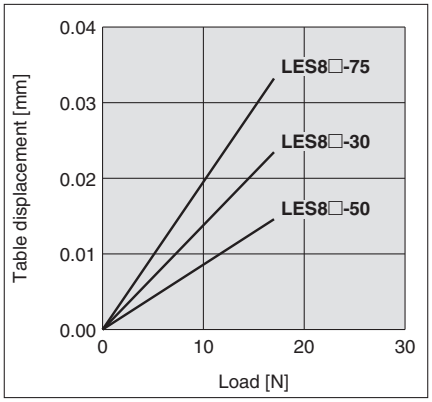

LES16

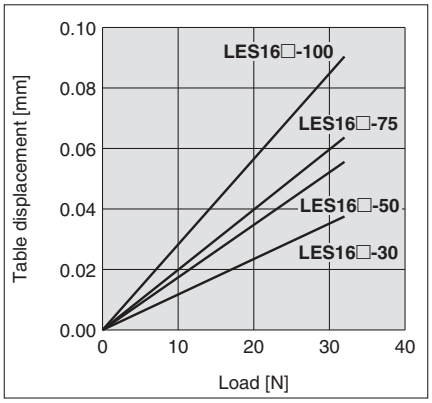

LES25

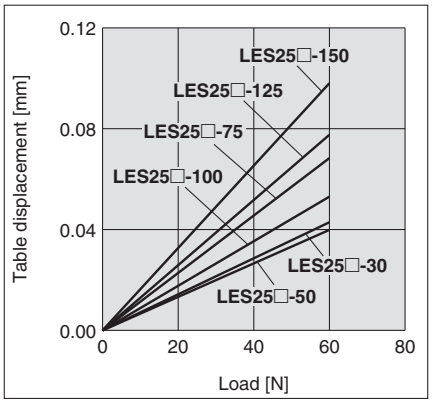

Rolling moment

Table displacement due to roll moment load
Table displacement of section A when loads are applied to the section F with the slide table retracted.

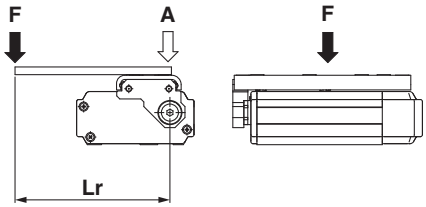

LES8 **Lr** = 80 mm

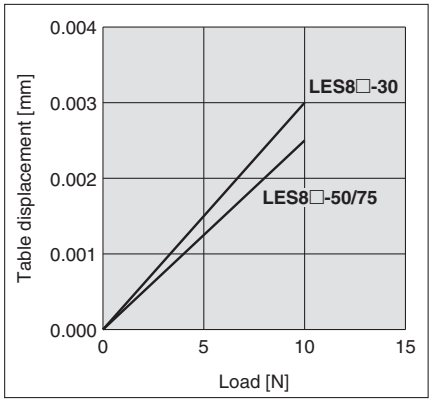

LES16 **Lr** = 60 mm

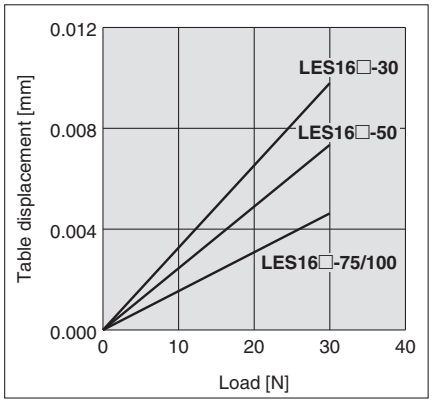

LES25 **Lr** = 100 mm

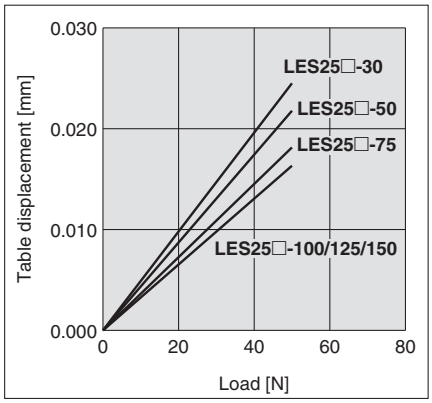

Electric Slide Table/Compact Type

Step Motor (Servo/24 VDC) Servo Motor (24 VDC)

Series LES

LES8, 16, 25

RoHS

How to Order

LES 8 R ☐ J – 30 ☐ ☐ ☐ – S 1 6N 1 ☐

❶ ❷ ❸ ❹ ❺ ❻ ❼ ❽ ❾ ❿ ⓫ ⓬ ⓭

❶ Size

8
16
25

❷ Motor mounting position

R	Basic type/R type 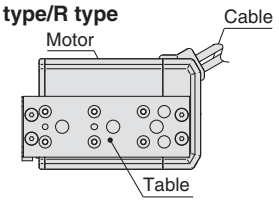
L	Symmetrical type/L type 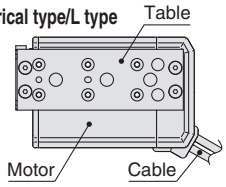
D	In-line motor type/D type 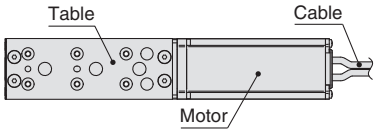

❸ Motor type

Symbol	Type	Compatible controllers/ driver
Nil	Step motor (Servo/24 VDC)	LECP6 LECP1 LECPA
A	Servo motor* (24 VDC)	LECA6

* LES25DA is not available.

⚠ Caution

[CE-compliant products]

① EMC compliance was tested by combining the electric actuator LES series and the controller LEC series.
The EMC depends on the configuration of the customer's control panel and the relationship with other electrical equipment and wiring. Therefore conformity to the EMC directive cannot be certified for SMC components incorporated into the customer's equipment under actual operating conditions. As a result it is necessary for the customer to verify conformity to the EMC directive for the machinery and equipment as a whole.

② For the servo motor (24 VDC) specification, EMC compliance was tested by installing a noise filter set (LEC-NFA).
Refer to page 61 for the noise filter set.
Refer to the LECA Operation Manual for installation.

[UL-compliant products]

When conformity to UL is required, the electric actuator and controller/driver should be used with a UL1310 Class 2 power supply.

❹ Lead [mm]

Symbol	LES8	LES16	LES25
J	8	10	16
K	4	5	8

❺ Stroke [mm]

Model \ Stroke	30	50	75	100	125	150
LES8	●*	●*	●	—	—	—
LES16	●*	●*	●	●	—	—
LES25	●*	●	●	●	●	●

* R/L type with lock is not available.

❻ Motor option

Nil	Without option
B	With lock

❼ Body option

Nil	Without option
S	Dustproof specification*

* For R/L type (IP5X equivalent), a scraper is mounted on the rod cover, and gaskets are mounted on both the end covers. For D type, a scraper is mounted on the rod cover.

The actuator and controller/driver are sold as a package.

Confirm that the combination of the controller/driver and the actuator is correct.

<Check the following before use.>

① Check the actuator label for model number. This matches the controller/driver.

② Check Parallel I/O configuration matches (NPN or PNP).

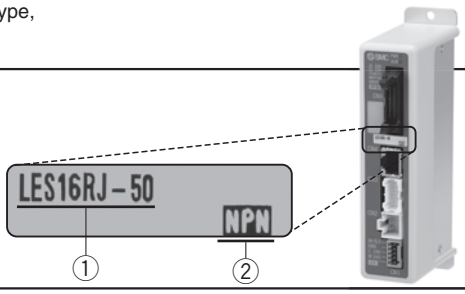

* Refer to the operation manual for using the products. Please download it via our website, http://www.smcworld.com

Basic type (R type)

Symmetrical type (L type)

In-line motor type (D type)

❽ Mounting*

Symbol	Mounting	R type L type	D type
Nil	Without side holder	●	●
H	With side holder (4 pcs.)	—	●

* Refer to page 23 for details.

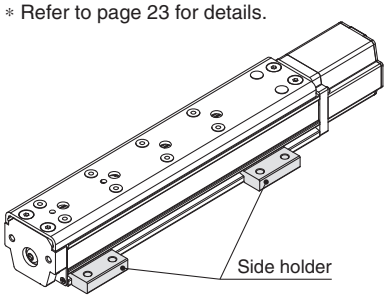

❾ Actuator cable type*1

Nil	Without cable
S	Standard cable*2
R	Robotic cable (Flexible cable)

*1 The standard cable should be used on fixed parts. For using on moving parts, select the robotic cable.
*2 Only available for the motor type "Step motor."

❿ Actuator cable length [m]

Nil	Without cable
1	1.5
3	3
5	5
8	8*
A	10*
B	15*
C	20*

* Produced upon receipt of order (Robotic cable only) Refer to the specifications Note 3) on page 11.

⓫ Controller/Driver type*1

Nil	Without controller/driver	
6N	LECP6/LECA6 (Step data input type)	NPN
6P		PNP
1N	LECP1*2 (Programless type)	NPN
1P		PNP
AN	LECPA*2 (Pulse input type)	NPN
AP		PNP

*1 Refer to page 52 for the detailed specifications of the controller/driver.
*2 Only available for the motor type "Step motor."

⓬ I/O cable length [m]*1

Nil	Without cable
1	1.5
3	3*2
5	5*2

*1 When "Without controller/driver" is selected for controller/driver types, I/O cable cannot be selected. Refer to page 61 (For LECP6/LECA6), page 74 (For LECP1) or page 81 (For LECPA) if I/O cable is required.
*2 When "Pulse input type" is selected for controller/driver types, pulse input usable only with differential. Only 1.5 m cables usable with open collector.

⓭ Controller/Driver mounting

Nil	Screw mounting
D	DIN rail mounting*

* DIN rail is not included. Order it separately. Refer to page 54 for details.

Compatible Controllers/Driver

Type	Step data input type 	Step data input type 	Programless type 	Pulse input type 
Series	LECP6	LECA6	LECP1	LECPA
Features	Value (Step data) input Standard controller		Capable of setting up operation (step data) without using a PC or teaching box	Operation by pulse signals
Compatible motor	Step motor (Servo/24 VDC)	Servo motor (24 VDC)	Step motor (Servo/24 VDC)	
Maximum number of step data	64 points		14 points	—
Power supply voltage	24 VDC			
Reference page	Page 53		Page 68	Page 75

Specifications

Step Motor (Servo/24 VDC)

Model			LES8□		LES16□		LES25□	
Actuator specifications	Stroke [mm]		30, 50, 75		30, 50, 75, 100		30, 50, 75, 100, 125, 150	
	Work load [kg] Note 1)	Horizontal	1		3		5	
		Vertical	0.5	0.25	3	1.5	5	2.5
	Pushing force 30 to 70 % [N] Note 2) 3)		6 to 15	4 to 10	23.5 to 55	15 to 35	77 to 180	43 to 100
	Speed [mm/s] Note 1) 3)		10 to 200	20 to 400	10 to 200	20 to 400	10 to 200	20 to 400
	Pushing speed [mm/s]		10 to 20	20	10 to 20	20	10 to 20	20
	Max. acceleration/deceleration [mm/s²]		5,000					
	Positioning repeatability [mm]		±0.05					
	Screw lead [mm]		4	8	5	10	8	16
	Impact/Vibration resistance [m/s²] Note 4)		50/20					
	Actuation type		Slide screw + Belt (R/L type), Slide screw (D type)					
	Guide type		Linear guide (Circulating type)					
	Operating temperature range [°C]		5 to 40					
	Operating humidity range [%RH]		90 or less (No condensation)					
Electric specifications	Motor size		□20		□28		□42	
	Motor type		Step motor (Servo/24 VDC)					
	Encoder		Incremental A/B phase (800 pulse/rotation)					
	Rated voltage [V]		24 VDC ±10%					
	Power consumption [W] Note 5)		18		69		45	
	Standby power consumption when operating [W] Note 6)		7		15		13	
	Max. instantaneous power consumption [W] Note 7)		35		69		67	
Lock unit specifications	Type	Note 8)	Non-magnetizing lock					
	Holding force [N]	Note 8)	24	2.5	300	48	500	77
	Power consumption [W] Note 9)	Note 8)	4		3.6		5	
	Rated voltage [V]	Note 8)	24 VDC ±10%					

Note 1) Speed changes according to the work load. Check “Speed–Work Load Graph (Guide)” on page 2.
Note 2) Pushing force accuracy is ±20% (F.S.).
Note 3) The speed and force may change depending on the cable length, load and mounting conditions. Furthermore, if the cable length exceeds 5 m, then it will decrease by up to 10% for each 5 m. (At 15 m: Reduced by up to 20%)
Note 4) Vibration resistance: No malfunction occurred in a test ranging between 45 to 2000 Hz. Test was performed in both an axial direction and a perpendicular direction to the lead screw. (Test was performed with the actuator in the initial state.)
Impact resistance: No malfunction occurred when the actuator was tested with a drop tester in both an axial direction and a perpendicular direction to the lead screw. (Test was performed with the actuator in the initial state.)
Note 5) The power consumption (including the controller) is for when the actuator is operating.
Note 6) The standby power consumption when operating (including the controller) is for when the actuator is stopped in the set position during the operation. Except during the pushing operation.
Note 7) The maximum instantaneous power consumption (including the controller) is for when the actuator is operating. This value can be used for the selection of the power supply.
Note 8) With lock only
Note 9) For an actuator with lock, add the power consumption for the lock.

Specifications

Servo Motor (24 VDC)

Model			LES8□A		LES16□A		LES25$^{R}_{L}$A Note 1)	
Actuator specifications	Stroke [mm]		30, 50, 75		30, 50, 75, 100		30, 50, 75, 100, 125, 150	
	Work load [kg]	Horizontal	1		3		5	
		Vertical	1	0.5	3	1.5	4	2
	Pushing force 50 to 100% [N] Note 2)		7.5 to 11	5 to 7.5	17.5 to 35	10 to 20	18 to 36	12 to 24
	Speed [mm/s]		10 to 200	20 to 400	10 to 200	20 to 400	10 to 200	20 to 400
	Pushing speed [mm/s]		10 to 20	20	10 to 20	20	10 to 20	20
	Max. acceleration/deceleration [mm/s²]		5,000					
	Positioning repeatability [mm]		±0.05					
	Screw lead [mm]		4	8	5	10	8	16
	Impact/Vibration resistance [m/s²] Note 3)		50/20					
	Actuation type		Slide screw + Belt (R/L type), Slide screw (D type)					
	Guide type		Linear guide (Circulating type)					
	Operating temperature range [°C]		5 to 40					
	Operating humidity range [%RH]		90 or less (No condensation)					
Electric specifications	Motor size		□20		□28		□42	
	Motor output [W]		10		30		36	
	Motor type		Servo motor (24 VDC)					
	Encoder (Angular displacement sensor)		Incremental A/B/Z phase (800 pulse/rotation)					
	Rated voltage [V]		24 VDC ±10%					
	Power consumption [W] Note 4)		42		68		97	
	Standby power consumption when operating [W] Note 5)		8 (Horizontal)/19 (Vertical)		9 (Horizontal)/23 (Vertical)		16 (Horizontal)/32 (Vertical)	
	Max. instantaneous power consumption [W] Note 6)		71		102		111	
Lock unit specifications	Type	Note 7)	Non-magnetizing lock					
	Holding force [N]	Note 7)	24	2.5	300	48	500	77
	Power consumption [W] Note 8)	Note 7)	4		3.6		5	
	Rated voltage [V]	Note 7)	24 VDC ±10%					

Note 1) LES25DA is not available.
Note 2) The pushing force values for LES8□A is 50 to 75%. Pushing force accuracy is ±20% (F.S.).
Note 3) Vibration resistance: No malfunction occurred in a test ranging between 45 to 2000 Hz. Test was performed in both an axial direction and a perpendicular direction to the lead screw. (Test was performed with the actuator in the initial state.)
Impact resistance: No malfunction occurred when the actuator was tested with a drop tester in both an axial direction and a perpendicular direction to the lead screw. (Test was performed with the actuator in the initial state.)
Note 4) The power consumption (including the controller) is for when the actuator is operating.
Note 5) The standby power consumption when operating (including the controller) is for when the actuator is stopped in the set position during the operation. Except during the pushing operation.
Note 6) The maximum instantaneous power consumption (including the controller) is for when the actuator is operating. This value can be used for the selection of the power supply.
Note 7) With lock only
Note 8) For an actuator with lock, add the power consumption for the lock.

Weight

Step Motor (Servo/24 VDC), Servo Motor (24 VDC) Common

[kg]

		Without lock						With lock					
Stroke [mm]		30	50	75	100	125	150	30	50	75	100	125	150
Model	LES8$^{R}_{L}$(A)	0.45	0.54	0.59	—	—	—	—	—	0.66	—	—	—
	LES16$^{R}_{L}$(A)	0.91	1.00	1.16	1.24	—	—	—	—	1.29	1.37	—	—
	LES25$^{R}_{L}$(A)	1.81	2.07	2.41	3.21	3.44	3.68	—	2.34	2.68	3.48	3.71	3.95
	LES8D(A)	0.40	0.52	0.58	—	—	—	0.47	0.59	0.65	—	—	—
	LES16D(A)	0.77	0.90	1.11	1.20	—	—	0.90	1.03	1.25	1.33	—	—
	LES25D	1.82	2.05	2.35	3.07	3.27	3.47	2.08	2.31	2.61	3.33	3.53	3.74

Construction: Basic Type/R Type, Symmetrical Type/L Type

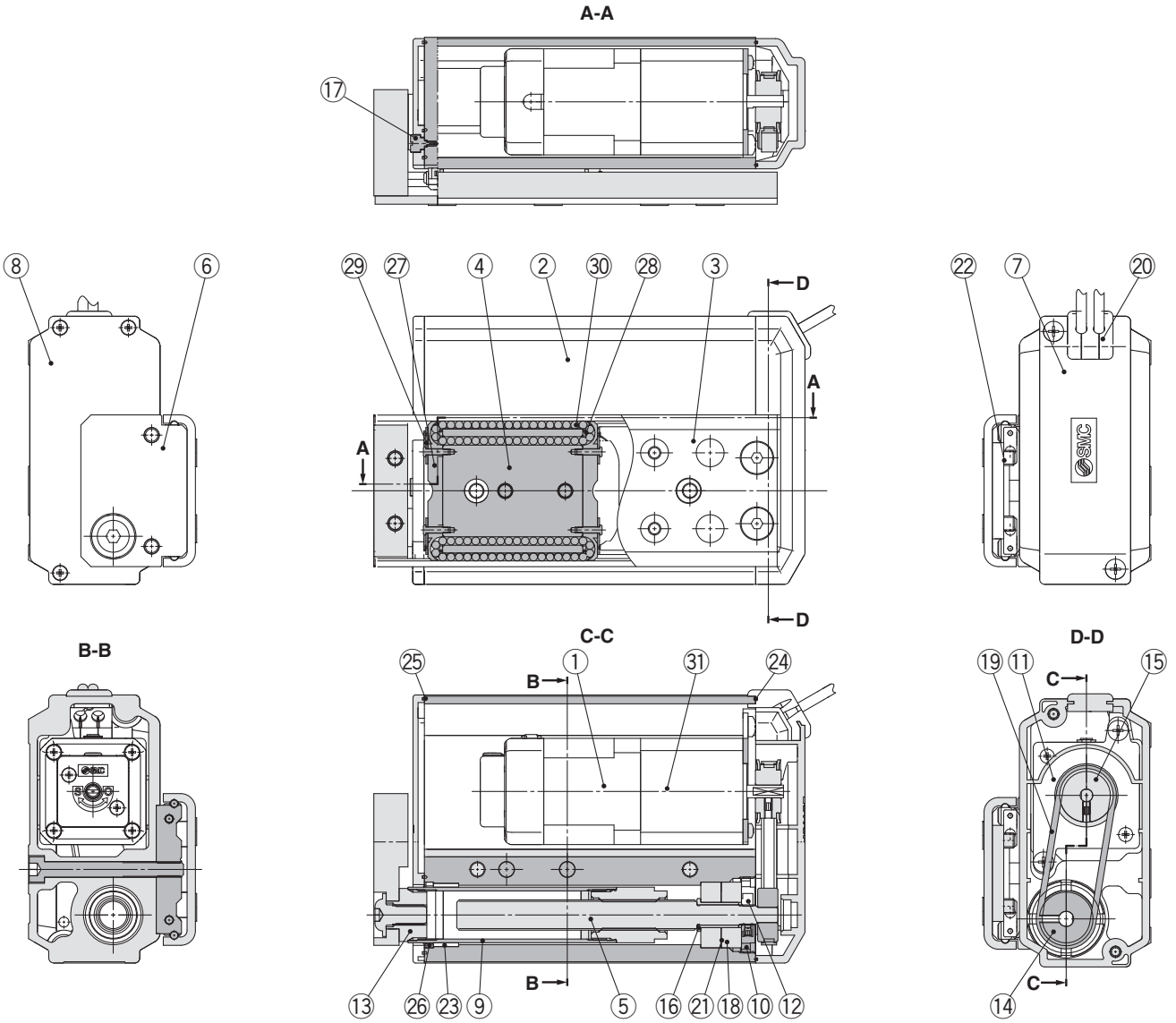

Component Parts

No.	Description	Material	Note
1	**Motor**	—	—
2	**Body**	Aluminum alloy	Anodized
3	**Table**	Stainless steel	Heat treatment + Electroless nickel plated
4	**Guide block**	Stainless steel	Heat treatment
5	**Lead screw**	Stainless steel	Heat treatment + Specially treated
6	**End plate**	Aluminum alloy	Anodized
7	**Pulley cover**	Synthetic resin	—
8	**End cover**	Synthetic resin	—
9	**Rod**	Stainless steel	—
10	**Bearing stopper**	Structural steel	Electroless nickel plated
		Brass	Electroless nickel plated (LES25R/L□ only)
11	**Motor plate**	Structural steel	—
12	**Lock nut**	Structural steel	Chromate treated
13	**Socket**	Structural steel	Electroless nickel plated
14	**Lead screw pulley**	Aluminum alloy	—
15	**Motor pulley**	Aluminum alloy	—
16	**Spacer**	Stainless steel	LES25R/L□ only
17	**Origin stopper**	Structural steel	Electroless nickel plated
18	**Bearing**	—	—
19	**Belt**	—	—

No.	Description	Material	Note
20	**Grommet**	Synthetic resin	—
21	**Sim ring**	Structural steel	—
22	**Stopper**	Structural steel	—
23	**Bushing**	—	Dustproof specification only
24	**Pulley gasket**	NBR	Dustproof specification only
25	**End gasket**	NBR	Dustproof specification only
26	**Scraper**	NBR	Dustproof specification only
27	**Cover**	Synthetic resin	—
28	**Return guide**	Synthetic resin	—
29	**Cover support**	Stainless steel	—
30	**Steel ball**	Special steel	—
31	**Lock**	—	With lock only

Replacement Parts/Belt

Size	Order no.
LES8$^{R}_{L}$	LE-D-1-1
LES16$^{R}_{L}$	LE-D-1-2
LES25$^{R}_{L}$	LE-D-1-3
LES25$^{R}_{L}$A	LE-D-1-4

Replacement Parts/Grease Pack

Applied portion	Order no.
Guide unit	GR-S-010 (10 g)
	GR-S-020 (20 g)

Construction: In-line Motor Type/D Type

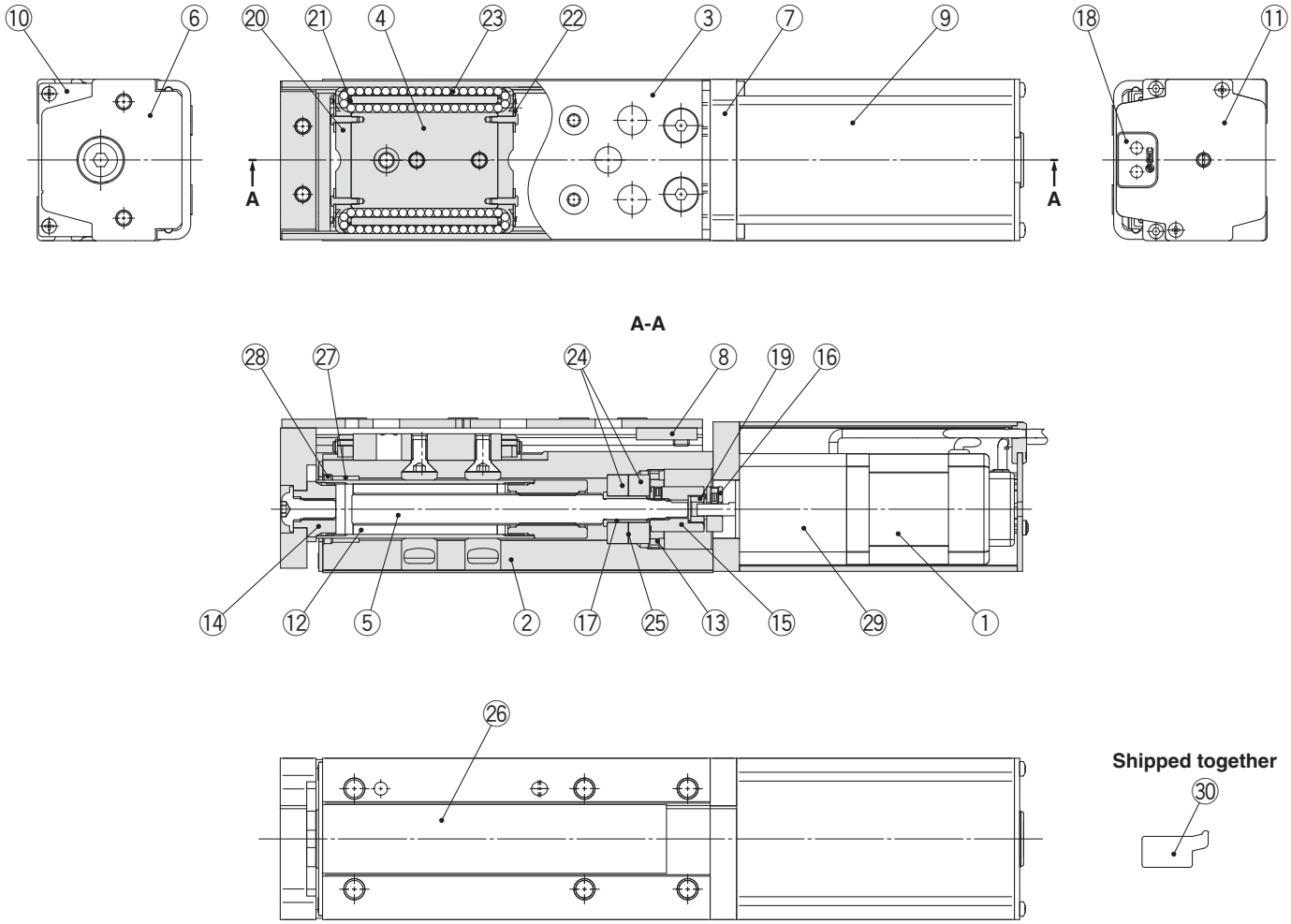

Component Parts

No.	Description	Material	Note
1	**Motor**	—	—
2	**Body**	Aluminum alloy	Anodized
3	**Table**	Stainless steel	Heat treatment + Electroless nickel plated
4	**Guide block**	Stainless steel	Heat treatment
5	**Lead screw**	Stainless steel	Heat treatment + Specially treated
6	**End plate**	Aluminum alloy	Anodized
7	**Motor flange**	Aluminum alloy	Anodized
8	**Stopper**	Structural steel	—
9	**Motor cover**	Aluminum alloy	Anodized
10	**End cover**	Aluminum alloy	Anodized
11	**Motor end cover**	Aluminum alloy	Anodized
12	**Rod**	Stainless steel	—
13	**Bearing stopper**	Structural steel	Electroless nickel plated
		Brass	Electroless nickel plated (LES25D□ only)
14	**Socket**	Structural steel	Electroless nickel plated
15	**Hub (Lead screw side)**	Aluminum alloy	—
16	**Hub (Motor side)**	Aluminum alloy	—
17	**Spacer**	Stainless steel	LES25D□ only
18	**Grommet**	NBR	—
19	**Spider**	NBR	—
20	**Cover**	Synthetic resin	—
21	**Return guide**	Synthetic resin	—
22	**Cover support**	Stainless steel	—
23	**Steel ball**	Special steel	—
24	**Bearing**	—	—
25	**Sim ring**	Structural steel	—
26	**Masking tape**	—	—
27	**Bushing**	—	Dustproof specification only
28	**Scraper**	NBR	Dustproof specification only
29	**Lock**	—	With lock only
30	**Side holder**	Aluminum alloy	Anodized

Optional Parts/Side Holder

Model	Order no.
LES8D	LE-D-3-1
LES16D	LE-D-3-2
LES25D	LE-D-3-3

Dimensions: Basic Type/R Type

LES8R

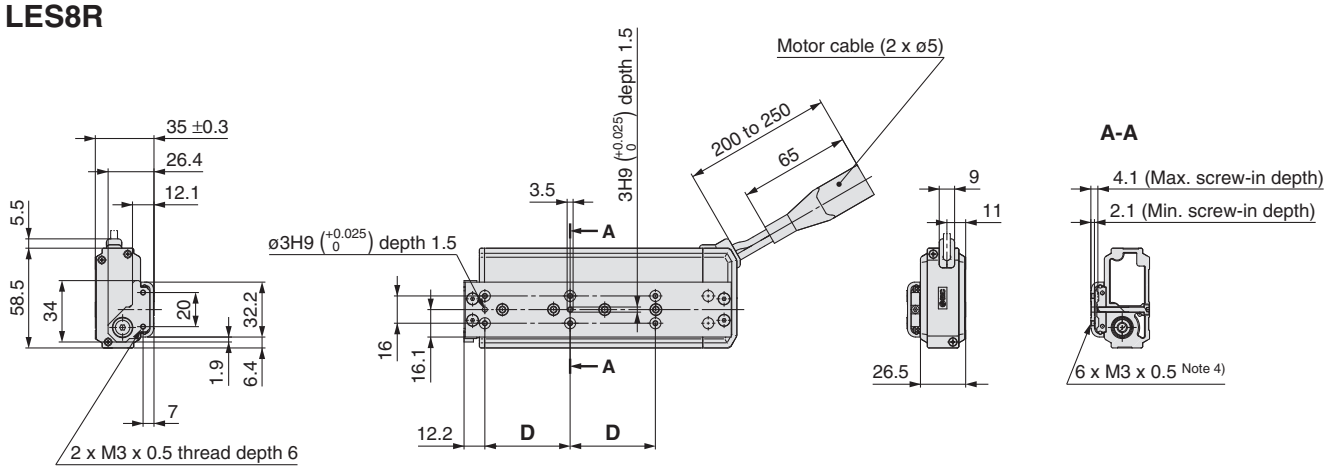

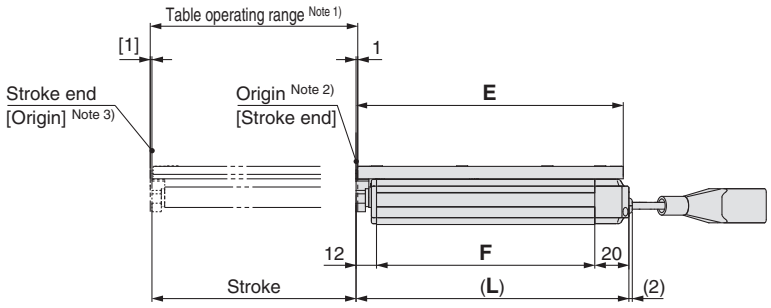

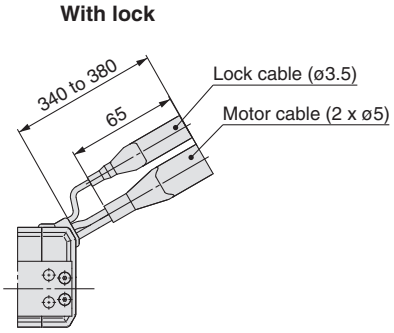

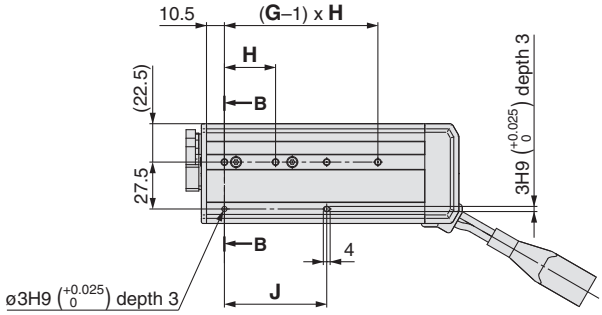

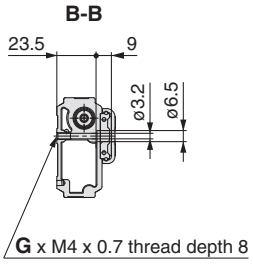

Connector		
	Step motor	Servo motor
Motor cable		
Lock cable		

Note 1) Range within which the table can move when it returns to origin.
Make sure a workpiece mounted on the table does not interfere with the workpieces and facilities around the table.
Note 2) Position after return to origin.
Note 3) The number in brackets indicates when the direction of return to origin has changed.
Note 4) If workpiece fixing bolts are too long, they can touch the guide block and cause a malfunction, etc. Use bolts that are between the maximum and minimum screw-in depths in length.

Dimensions

(mm)

Model	L	D	E	F	G	H	J
LES8R□□-30□□-□□□□□	94.5	26	88.7	62.5	2	27	27
LES8R□□-50□□-□□□□□	137.5	46	131.7	105.5	3	29	58
LES8R□□-75□□-□□□□□	162.5	50	156.7	130.5	4	30	60

Dimensions: Basic Type/R Type

LES16R

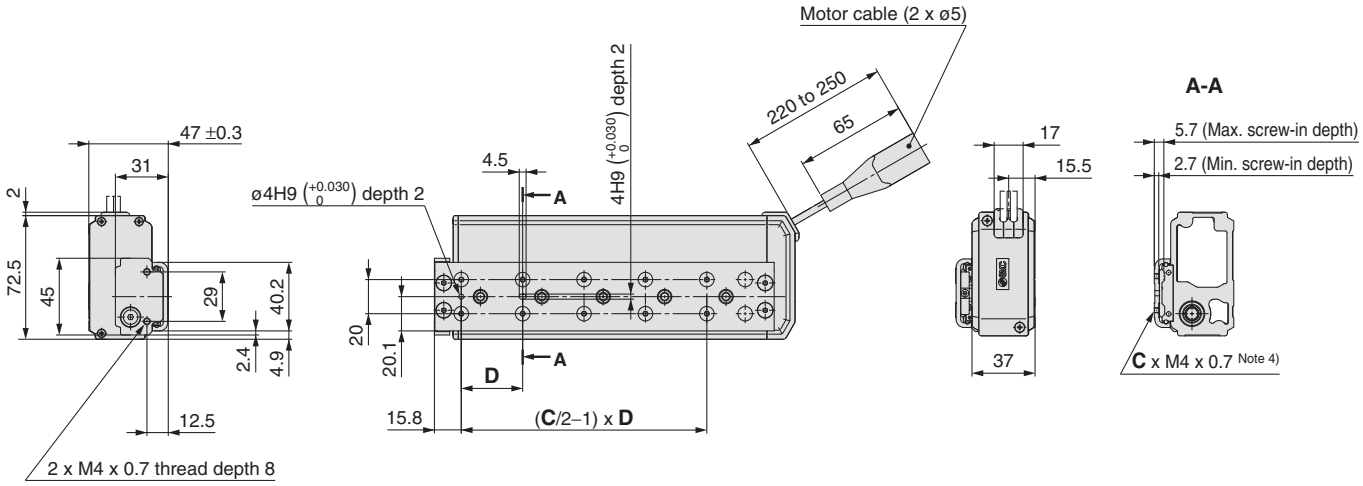

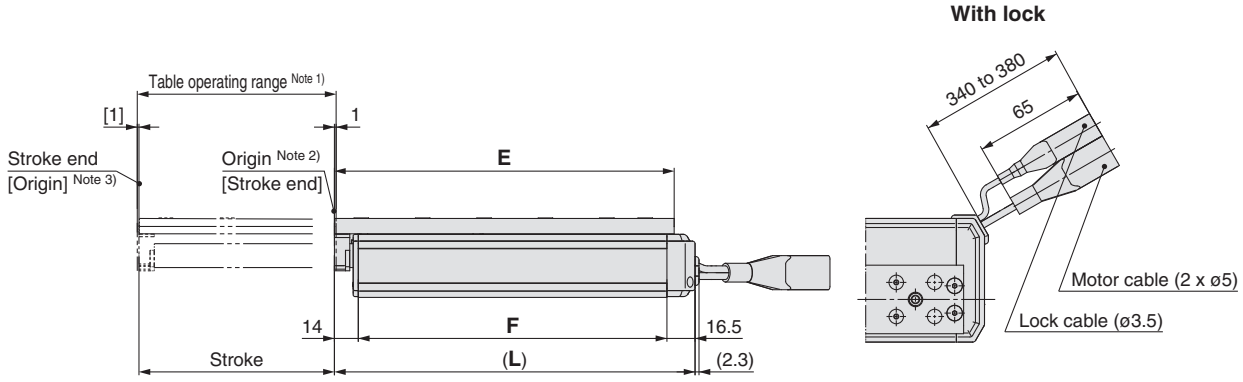

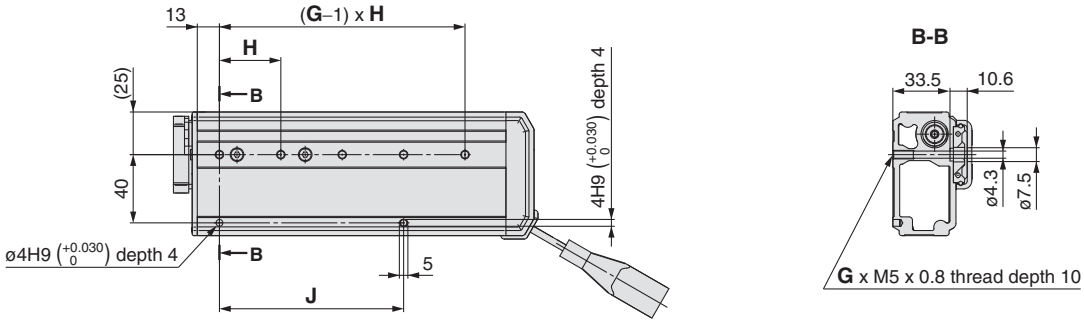

Note 1) Range within which the table can move when it returns to origin.
Make sure a workpiece mounted on the table does not interfere with the workpieces and facilities around the table.
Note 2) Position after return to origin.
Note 3) The number in brackets indicates when the direction of return to origin has changed.
Note 4) If workpiece fixing bolts are too long, they can touch the guide block and cause a malfunction, etc.
Use bolts that are between the maximum and minimum screw-in depths in length.

Connector

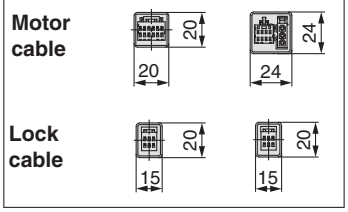

Dimensions

(mm)

Model	L	C	D	E	F	G	H	J
LES16R□□-30□□-□□□□□	108.5	4	38	102.3	78	2	40	40
LES16R□□-50□□-□□□□□	136.5	6	34	130.3	106	2	78	78
LES16R□□-75□□-□□□□□	180.5	8	36	174.3	150	4	36	72
LES16R□□-100□□-□□□□□	205.5	10	36	199.3	175	5	36	108

Dimensions: Basic Type/R Type

LES25R

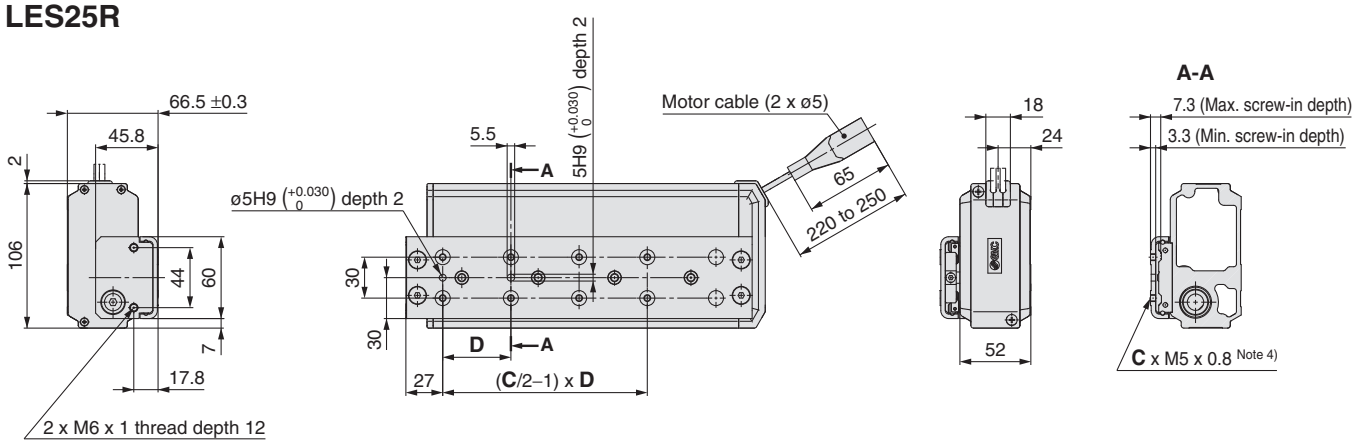

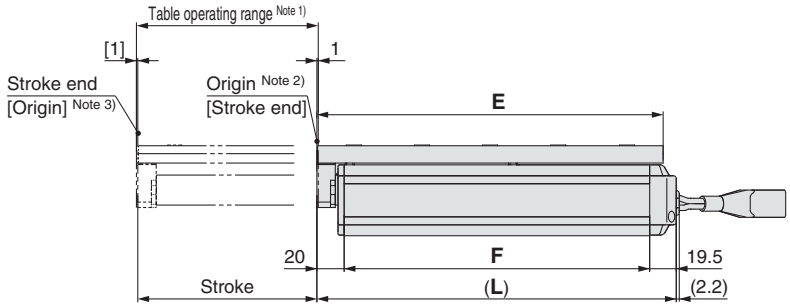

With lock

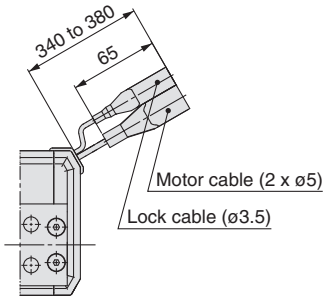

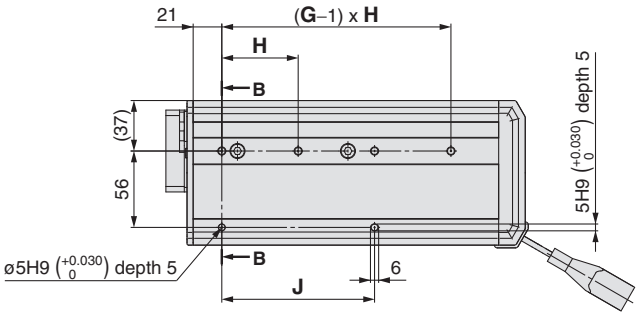

B-B

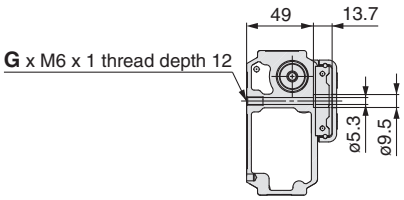

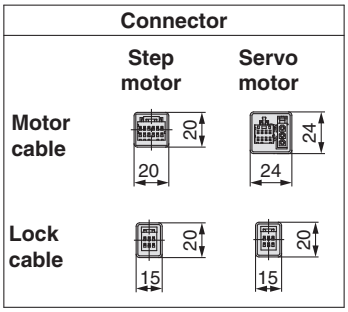

Note 1) Range within which the table can move when it returns to origin.
Make sure a workpiece mounted on the table does not interfere with the workpieces and facilities around the table.
Note 2) Position after return to origin.
Note 3) The number in brackets indicates when the direction of return to origin has changed.
Note 4) If workpiece fixing bolts are too long, they can touch the guide block and cause a malfunction, etc.
Use bolts that are between the maximum and minimum screw-in depths in length.

Dimensions

(mm)

Model	L	C	D	E	F	G	H	J
LES25R□□-30□□-□□□□□	144.5	4	48	133.5	105	2	46	46
LES25R□□-50□□-□□□□□	170.5	6	42	159.5	131	2	84	84
LES25R□□-75□□-□□□□□	204.5	6	55	193.5	165	2	112	112
LES25R□□-100□□-□□□□□	277.5	8	50	266.5	238	4	56	112
LES25R□□-125□□-□□□□□	302.5	8	55	291.5	263	4	59	118
LES25R□□-150□□-□□□□□	327.5	8	62	316.5	288	4	62	124

Dimensions: Symmetrical Type/L Type

LES8L

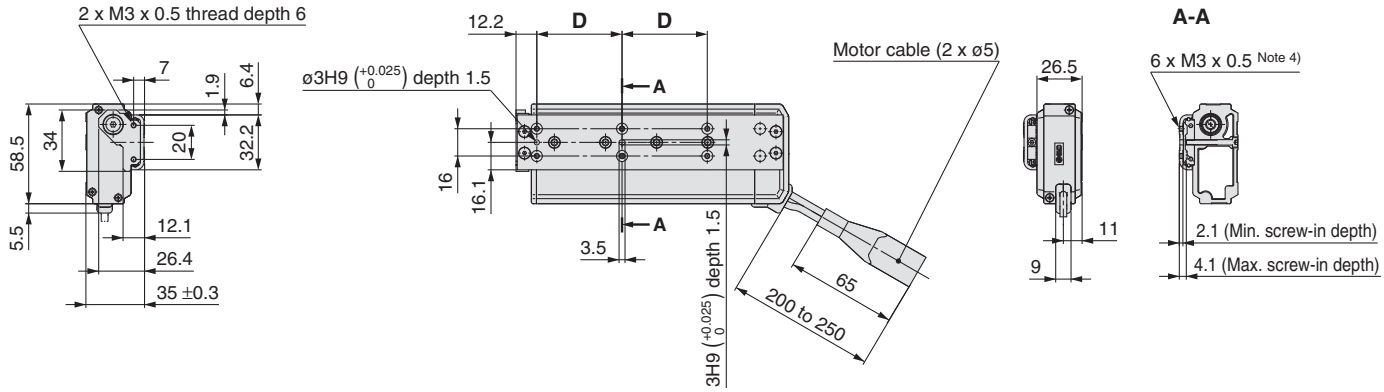

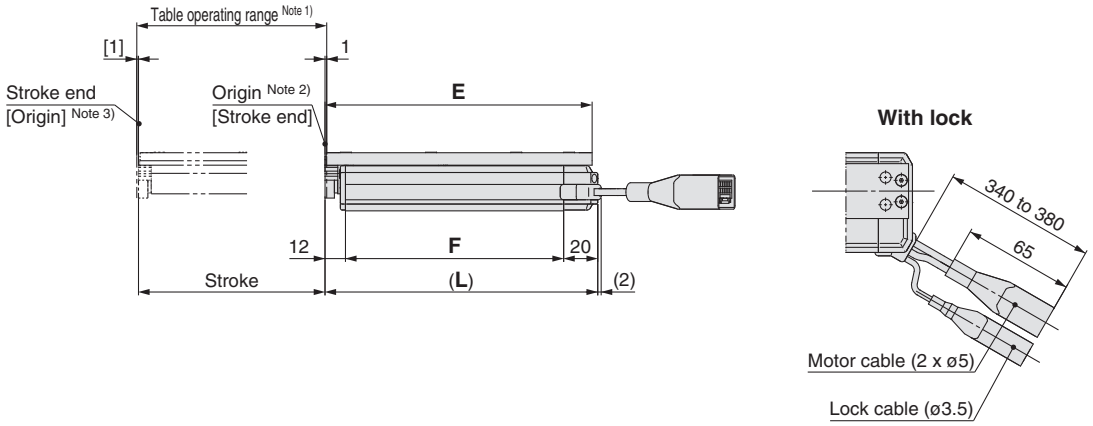

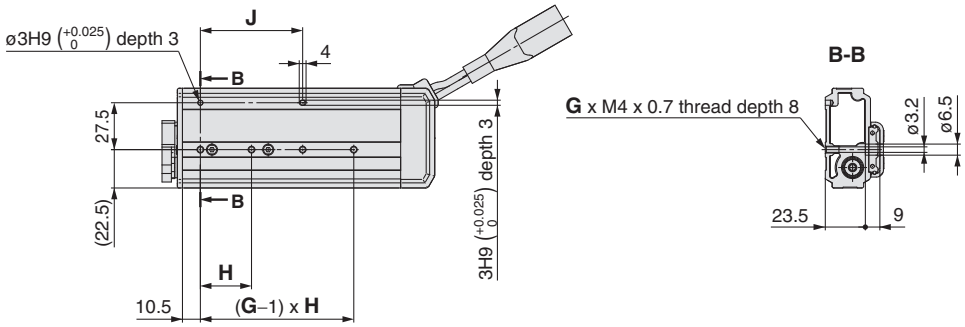

Connector

	Step motor	Servo motor
Motor cable	20 / 20	24 / 24
Lock cable	20 / 15	20 / 15

Note 1) Range within which the table can move when it returns to origin.
Make sure a workpiece mounted on the table does not interfere with the workpieces and facilities around the table.
Note 2) Position after return to origin.
Note 3) The number in brackets indicates when the direction of return to origin has changed.
Note 4) If workpiece fixing bolts are too long, they can touch the guide block and cause a malfunction, etc.
Use bolts that are between the maximum and minimum screw-in depths in length.

Dimensions

(mm)

Model	L	D	E	F	G	H	J
LES8L□□-30□□-□□□□□	94.5	26	88.7	62.5	2	27	27
LES8L□□-50□□-□□□□□	137.5	46	131.7	105.5	3	29	58
LES8L□□-75□□-□□□□□	162.5	50	156.7	130.5	4	30	60

Dimensions: Symmetrical Type/L Type

LES16L

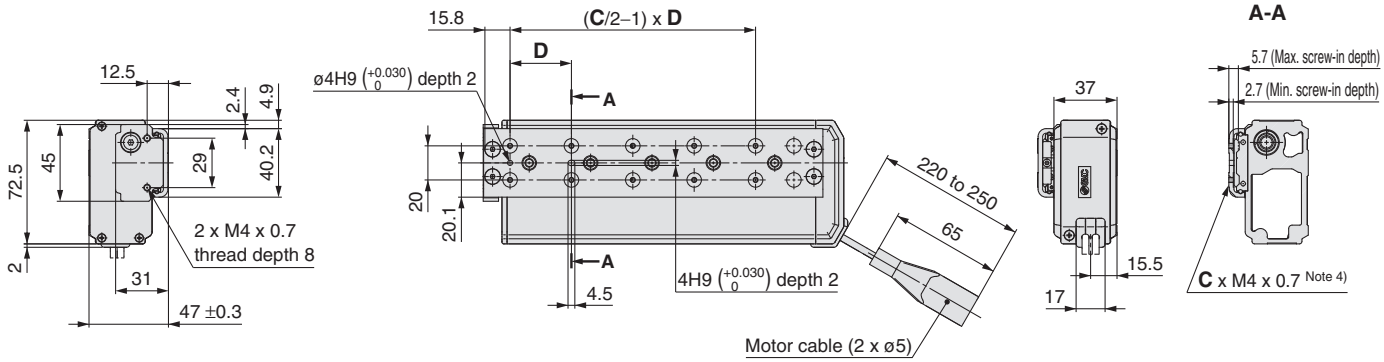

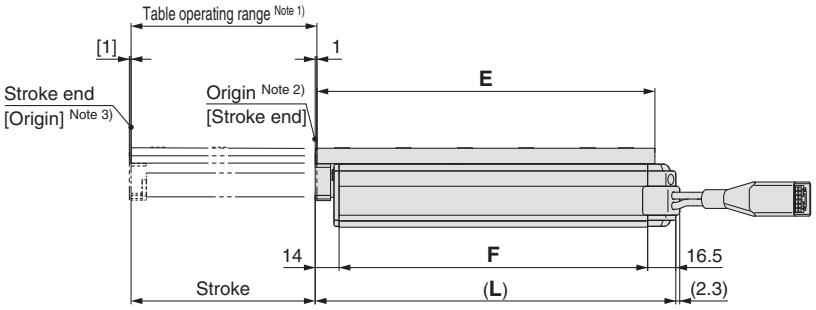

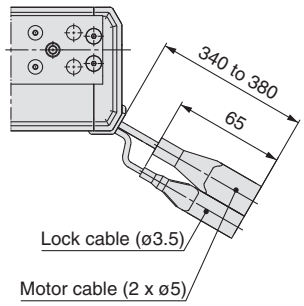

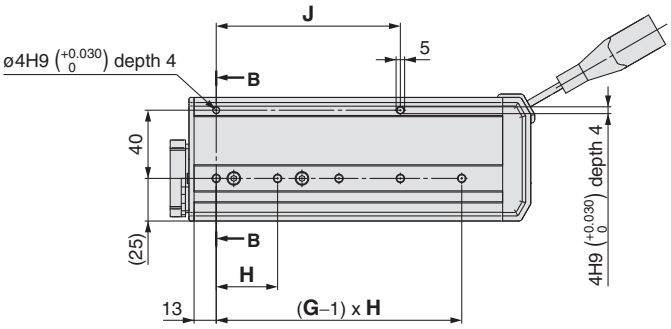

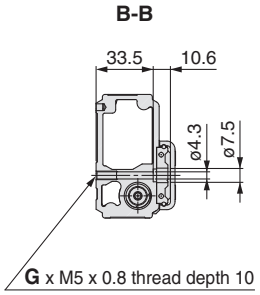

Connector		
	Step motor	Servo motor
Motor cable		
Lock cable		

Note 1) Range within which the table can move when it returns to origin.
Make sure a workpiece mounted on the table does not interfere with the workpieces and facilities around the table.
Note 2) Position after return to origin.
Note 3) The number in brackets indicates when the direction of return to origin has changed.
Note 4) If workpiece fixing bolts are too long, they can touch the guide block and cause a malfunction, etc.
Use bolts that are between the maximum and minimum screw-in depths in length.

Dimensions

(mm)

Model	L	C	D	E	F	G	H	J
LES16L□□-30□□-□□□□□	108.5	4	38	102.3	78	2	40	40
LES16L□□-50□□-□□□□□	136.5	6	34	130.3	106	2	78	78
LES16L□□-75□□-□□□□□	180.5	8	36	174.3	150	4	36	72
LES16L□□-100□□-□□□□□	205.5	10	36	199.3	175	5	36	108

Dimensions: Symmetrical Type/L Type

LES25L

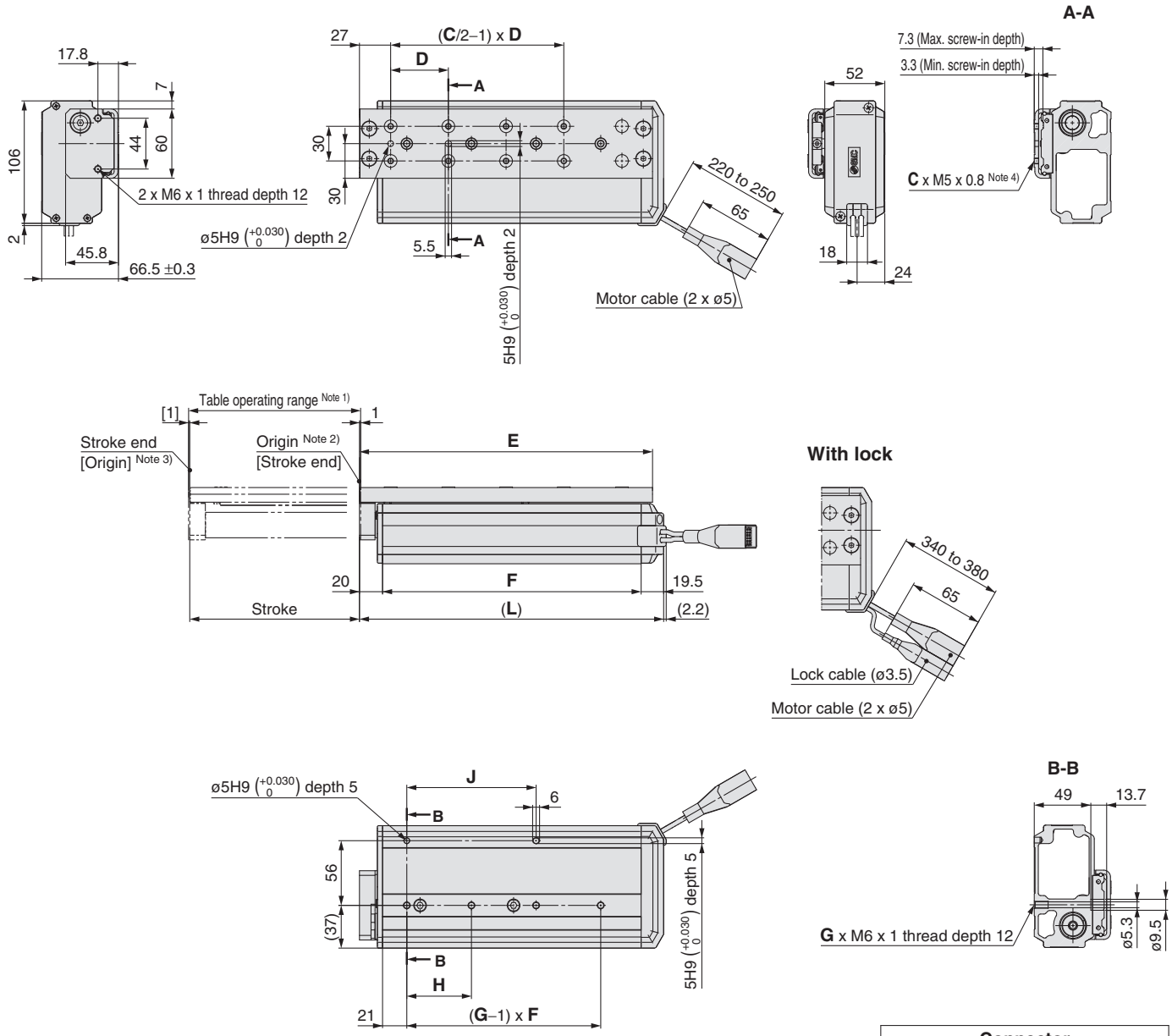

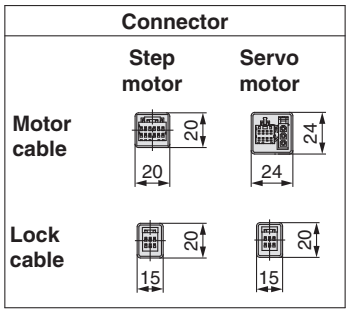

Note 1) Range within which the table can move when it returns to origin.
Make sure a workpiece mounted on the table does not interfere with the workpieces and facilities around the table.
Note 2) Position after return to origin.
Note 3) The number in brackets indicates when the direction of return to origin has changed.
Note 4) If workpiece fixing bolts are too long, they can touch the guide block and cause a malfunction, etc.
Use bolts that are between the maximum and minimum screw-in depths in length.

Dimensions

(mm)

Model	L	C	D	E	F	G	H	J
LES25L□□-30□□-□□□□□	144.5	4	48	133.5	105	2	46	46
LES25L□□-50□□-□□□□□	170.5	6	42	159.5	131	2	84	84
LES25L□□-75□□-□□□□□	204.5	6	55	193.5	165	2	112	112
LES25L□□-100□□-□□□□□	277.5	8	50	266.5	238	4	56	112
LES25L□□-125□□-□□□□□	302.5	8	55	291.5	263	4	59	118
LES25L□□-150□□-□□□□□	327.5	8	62	316.5	288	4	62	124

Dimensions: In-line Motor Type/D Type

LES8D

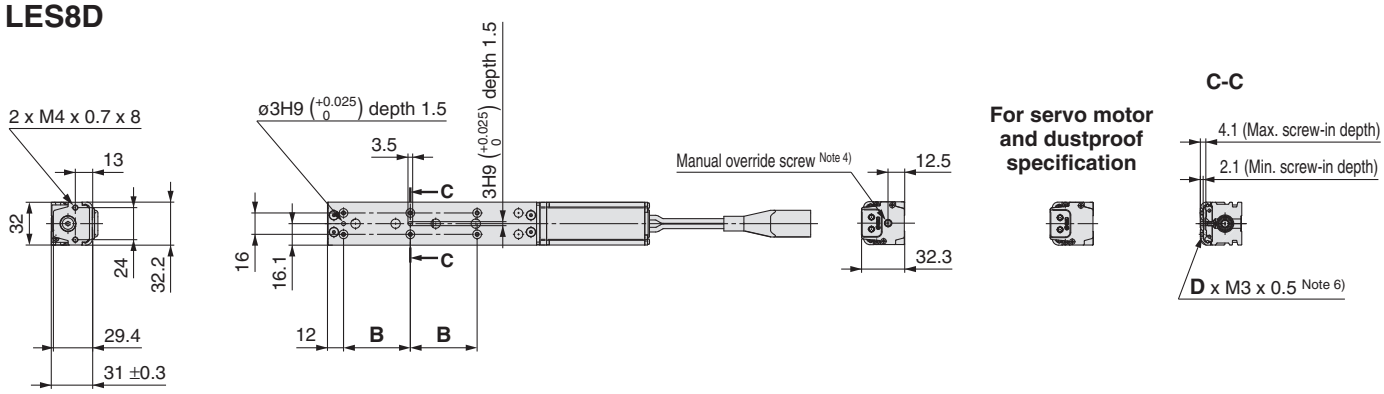

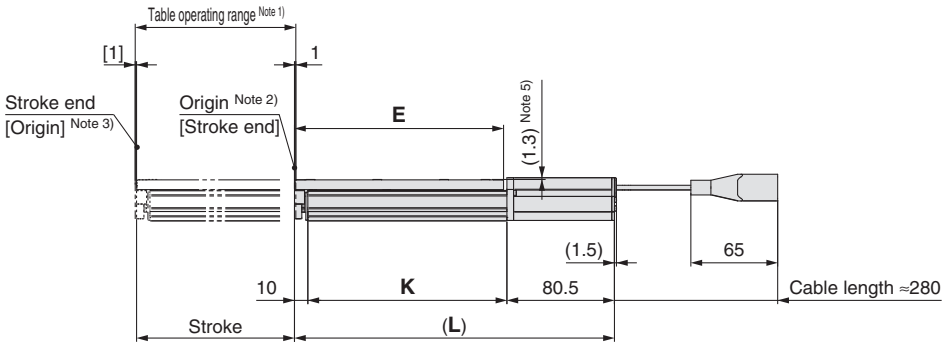

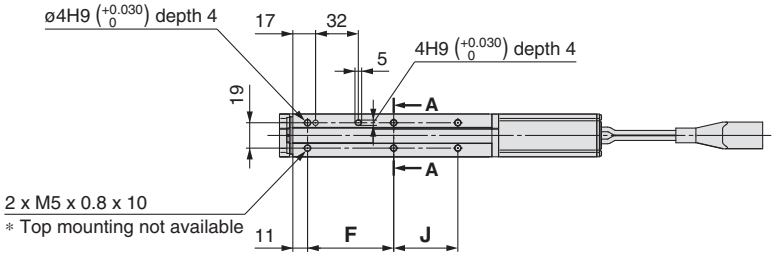

A-A

∗ 1 section (30 st)
∗ 2 sections (50, 75 st)

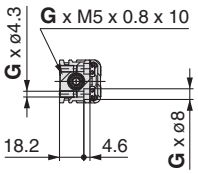

With lock

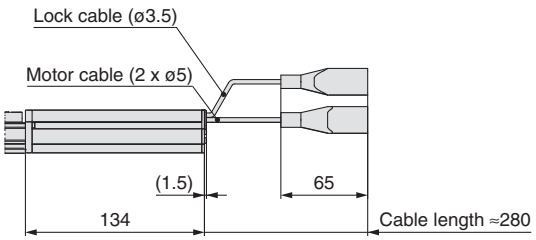

Connector

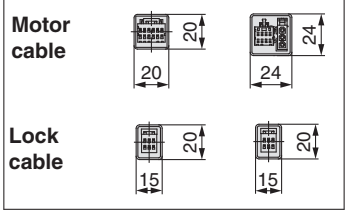

Note 1) Range within which the table can move when it returns to origin.
Make sure a workpiece mounted on the table does not interfere with the workpieces and facilities around the table.
Note 2) Position after return to origin.
Note 3) The number in brackets indicates when the direction of return to origin has changed.
Note 4) The distance between the motor end cover and the manual override screw is up to 16 mm. The motor end cover hole size is ø5.5.
Note 5) The table is lower than the motor cover. Make sure it does not interfere with the workpiece.
Note 6) If workpiece fixing bolts are too long, they can touch the guide block and cause a malfunction, etc.
Use bolts that are between the maximum and minimum screw-in depths in length.

Dimensions

(mm)

Model	(L)	B	D	E	F	G	J	K
LES8D□□-30□□-□□□□□	171.5	26	6	88.5	44.5	2	—	81
LES8D□□-30B□□-□□□□□	225							
LES8D□□-50□□-□□□□□	214.5	46	6	131.5	64.5	4	23	124
LES8D□□-50B□□-□□□□□□	268							
LES8D□□-75□□-□□□□□	239.5	50	6	156.5	64.5	4	48	149
LES8D□□-75B□□-□□□□□	293							

Dimensions: In-line Motor Type/D Type

LES16D

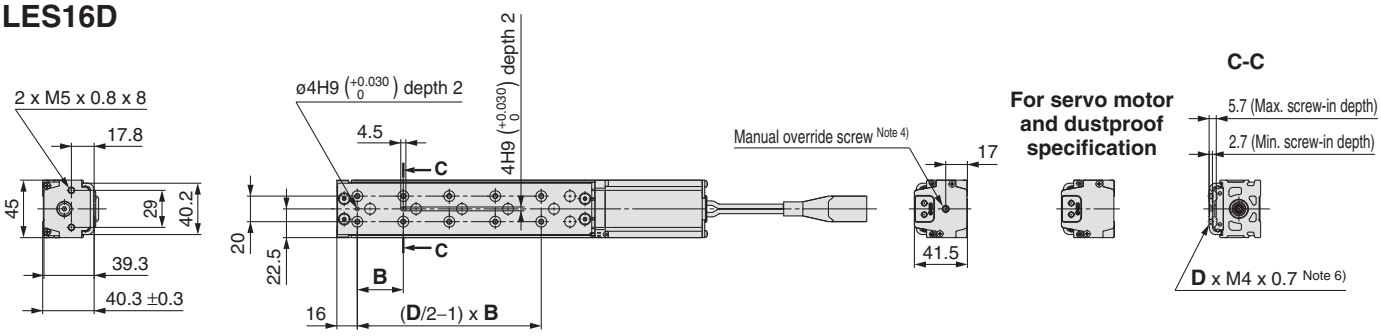

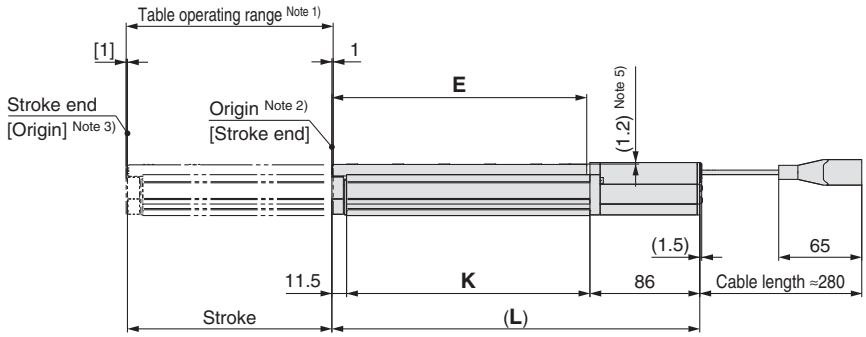

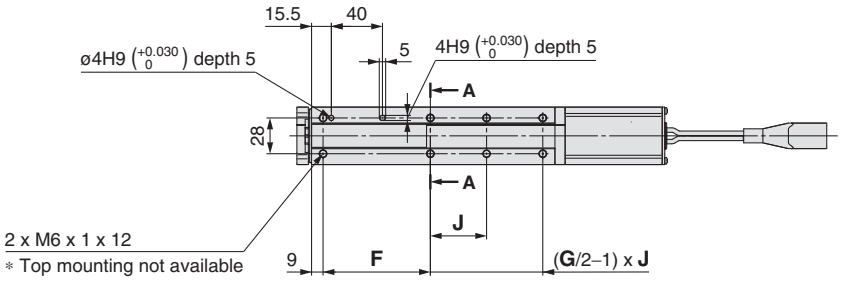

A-A

∗ 2 sections (30, 50, 75 st)
∗ 3 sections (100 st)

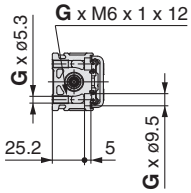

With lock

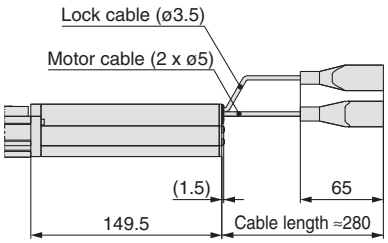

Connector

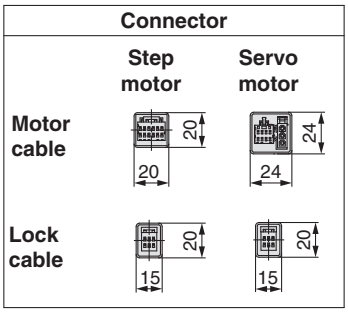

Note 1) Range within which the table can move when it returns to origin.
Make sure a workpiece mounted on the table does not interfere with the workpieces and facilities around the table.
Note 2) Position after return to origin.
Note 3) The number in brackets indicates when the direction of return to origin has changed.
Note 4) The distance between the motor end cover and the manual override screw is up to 17 mm. The motor end cover hole size is ø5.5.
Note 5) The table is lower than the motor cover. Make sure it does not interfere with the workpiece.
Note 6) If workpiece fixing bolts are too long, they can touch the guide block and cause a malfunction, etc.
Use bolts that are between the maximum and minimum screw-in depths in length.

Dimensions

(mm)

Model	(L)	B	D	E	F	G	J	K
LES16D□□-30□□-□□□□□	193	38	4	102.5	56.5	4	18.5	95.5
LES16D□□-30B□□-□□□□□	256.5							
LES16D□□-50□□-□□□□□	221	34	6	130.5	65	4	38	123.5
LES16D□□-50B□□-□□□□□	284.5							
LES16D□□-75□□-□□□□□	265	36	8	174.5	84	4	63	167.5
LES16D□□-75B□□-□□□□□	328.5							
LES16D□□-100□□-□□□□□	290	36	10	199.5	84	6	44	192.5
LES16D□□-100B□□-□□□□□	353.5							

Dimensions: In-line Motor Type/D Type

LES25D

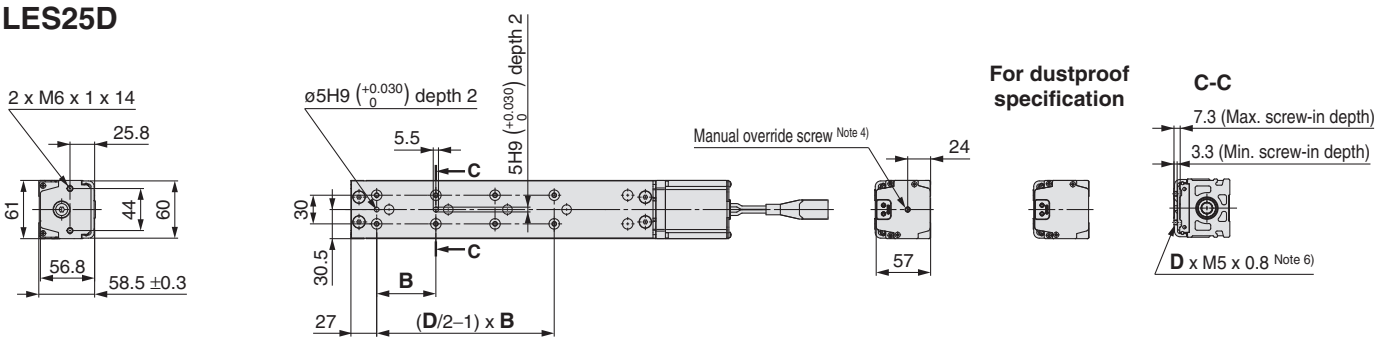

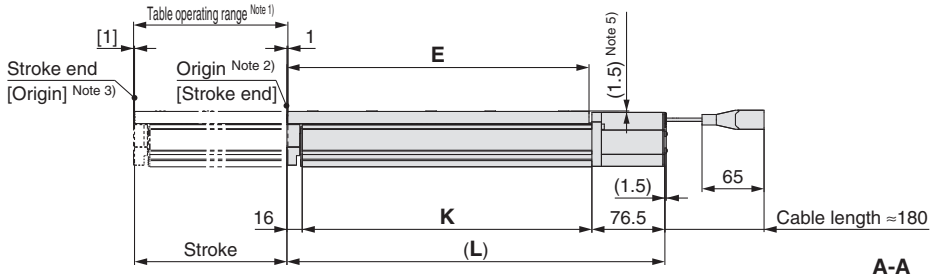

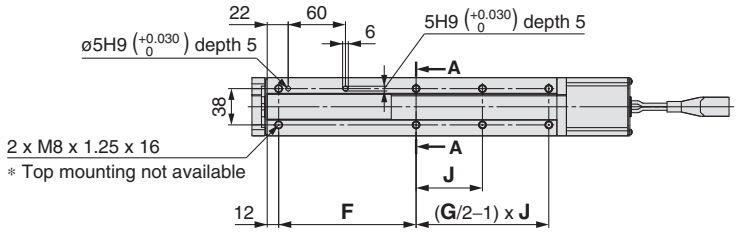

A-A

∗ 2 sections (30, 50, 75, 100 st)
∗ 3 sections (125, 150 st)

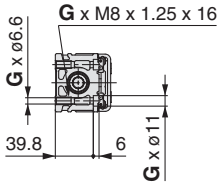

With lock

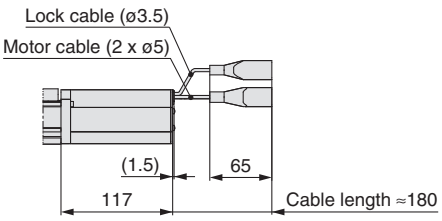

Connector

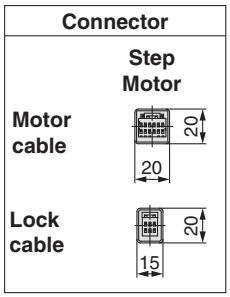

Note 1) Range within which the table can move when it returns to origin. Make sure a workpiece mounted on the table does not interfere with the workpieces and facilities around the table.
Note 2) Position after return to origin.
Note 3) The number in brackets indicates when the direction of return to origin has changed.
Note 4) The distance between the motor end cover and the manual override screw is up to 4 mm. The motor end cover hole size is ø5.5.
Note 5) The table is lower than the motor cover.
Note 6) If workpiece fixing bolts are too long, they can touch the guide block and cause a malfunction, etc. Use bolts that are between the maximum and minimum screw-in depths in length.

Dimensions

(mm)

Model	(L)	B	D	E	F	G	J	K
LES25D□-30□□-□□□□□	214	48	4	133.5	81	4	19	121.5
LES25D□-30B□□-□□□□□	254.5							
LES25D□-50□□-□□□□□	240	42	6	159.5	87	4	39	147.5
LES25D□-50B□□-□□□□□	280.5							
LES25D□-75□□-□□□□□	274	55	6	193.5	96	4	64	181.5
LES25D□-75B□□-□□□□□	314.5							
LES25D□-100□□-□□□□□	347	50	8	266.5	144	4	89	254.5
LES25D□-100B□□-□□□□□	387.5							
LES25D□-125□□-□□□□□	372	55	8	291.5	144	6	57	279.5
LES25D□-125B□□-□□□□□	412.5							
LES25D□-150□□-□□□□□	397	62	8	316.5	144	6	69.5	304.5
LES25D□-150B□□-□□□□□	437.5							

Side Holder

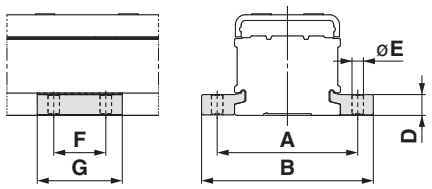

(mm)

Part no. Note)	A	B	D	E	F	G	Applicable model
LE-D-3-1	45	57.6	6.7	4.5	20	33	LES8D
LE-D-3-2	60	74	8.3	5.5	25	40	LES16D
LE-D-3-3	81	99	12	6.6	30	49	LES25D

Note) Model numbers for 1 side holder.

Model Selection 1

Selection Procedure

For the compact type LES series, refer to page 1.

Step 1 Check the work load–speed. → **Step 2** Check the cycle time. → **Step 3** Check the allowable moment.

Selection Example

Step 1 Check the work load–speed. <Speed–Work load graph> (Page 26)

Select the target model based on the workpiece mass and speed with reference to the <Speed–Work load graph>.

Selection example) The **LESH16□J-50** is temporarily selected based on the graph shown on the right side.

Step 2 Check the cycle time.

It is possible to obtain an approximate cycle time by using method 1, but if a more detailed cycle time is required, use method 2.

∗ Although it is possible to make a suitable selection by using method 1, this calculation is based on a maximum load condition. Therefore, if a more detailed selection for each load is required, use method 2.

Method 1: Check the cycle time graph. (Page 27)

Method 2: Calculation <Speed–Work load graph> (Page 26)

Calculate the cycle time using the following calculation method.

Cycle time:

T can be found from the following equation.

$$T = T1 + T2 + T3 + T4 \text{ [s]}$$

- T1: Acceleration time and T3: Deceleration time can be obtained by the following equation.

$$T1 = V/a1 \text{ [s]} \qquad T3 = V/a2 \text{ [s]}$$

- T2: Constant speed time can be found from the following equation.

$$T2 = \frac{L - 0.5 \cdot V \cdot (T1 + T3)}{V} \text{ [s]}$$

- T4: Settling time varies depending on the conditions such as motor types, load and in positioning of the step data. Therefore, please calculate the settling time with reference to the following value.

$$T4 = 0.15 \text{ [s]}$$

Calculation example)

T1 to T4 can be calculated as follows.

$$T1 = V/a1 = 220/5000 = 0.04 \text{ [s]},$$

$$T3 = V/a2 = 220/5000 = 0.04 \text{ [s]}$$

$$T2 = \frac{L - 0.5 \cdot V \cdot (T1 + T3)}{V} = \frac{50 - 0.5 \cdot 220 \cdot (0.04 + 0.04)}{220} = 0.19 \text{ [s]}$$

$$T4 = 0.15 \text{ [s]}$$

Therefore, the cycle time can be obtained as follows.

$$T = T1 + T2 + T3 + T4 = 0.04 + 0.19 + 0.04 + 0.15 = \mathbf{0.42\ [s]}$$

Step 3 Check the allowable moment. <Static allowable moment> (Page 27) <Dynamic allowable moment> (Page 28)

Confirm the moment that applies to the actuator is within the allowable range for both static and dynamic conditions.

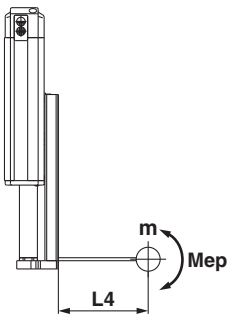

Based on the above calculation result, the LESH16□J-50 is selected.

Operating conditions

- Workpiece mass: 1 [kg]
- Speed: 220 [mm/s]
- Mounting orientation: Vertical
- Stroke: 50 [mm]
- Acceleration/Deceleration: 5,000 [mm/s²]
- Cycle time: 0.5 seconds
- Workpiece mounting condition:

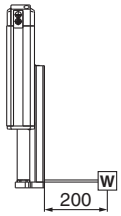

LESH16□/Step Motor Vertical

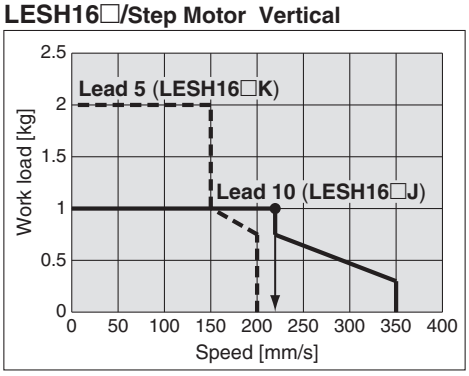

<Speed–Work load graph>

LESH16□/Step Motor

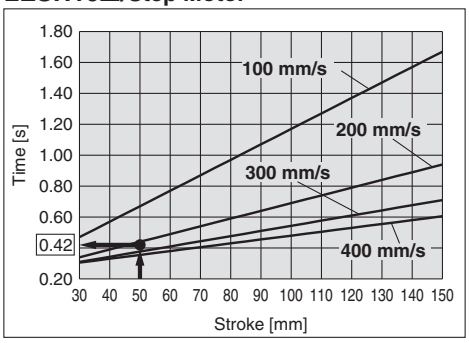

<Cycle time>

LESH16/Pitching

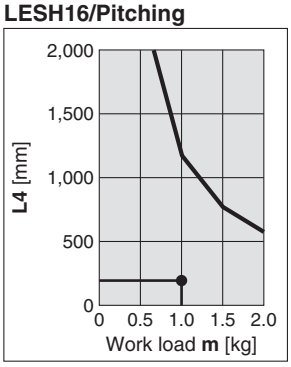

<Dynamic allowable moment>

Speed–Work Load Graph (Guide)

Step Motor (Servo/24 VDC)

∗ The following graph shows the values when moving force is 100%.

Servo Motor (24 VDC)

∗ The following graph shows the values when moving force is 250%.

LESH8□

Horizontal

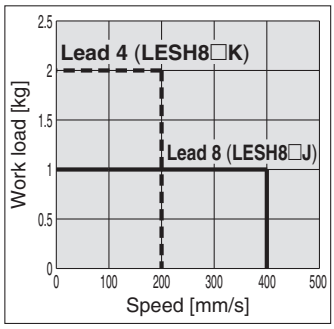

Vertical

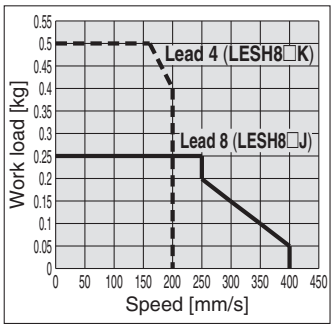

LESH8□A

Horizontal

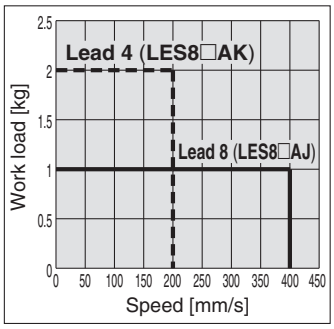

Vertical

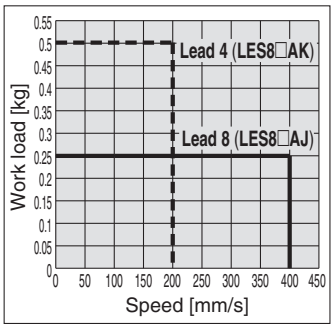

LESH16□

Horizontal

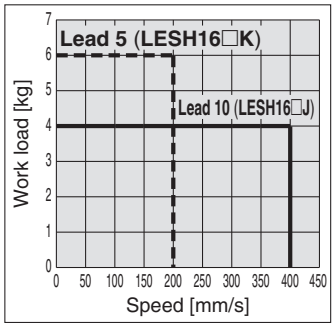

Vertical

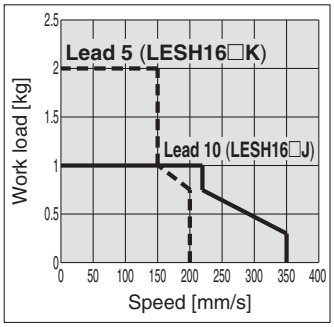

LESH16□A

Horizontal

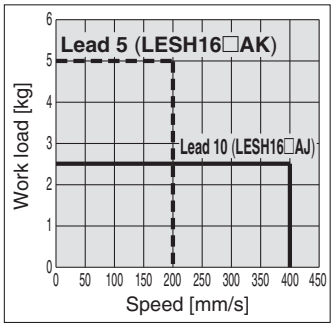

Vertical

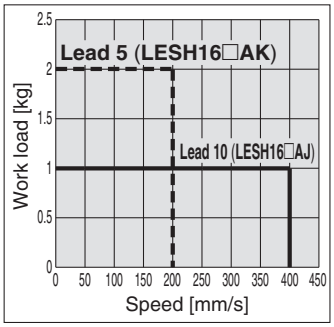

LESH25□

Horizontal

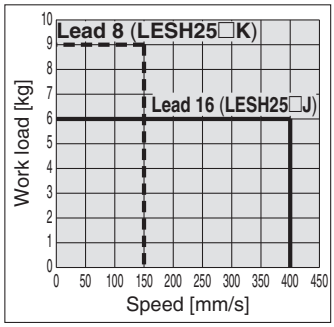

Vertical

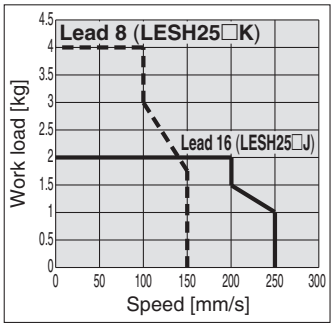

LESH25$^{R}_{L}$A

Horizontal

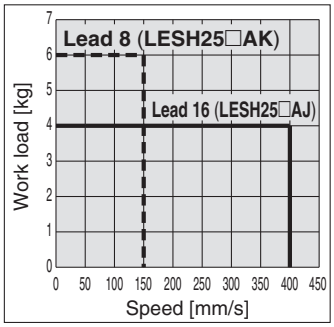

Vertical

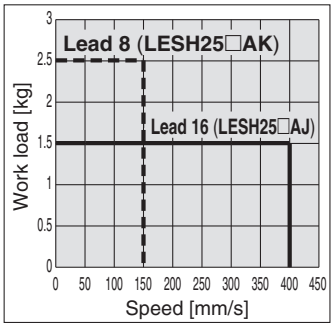

Cycle Time (Guide)

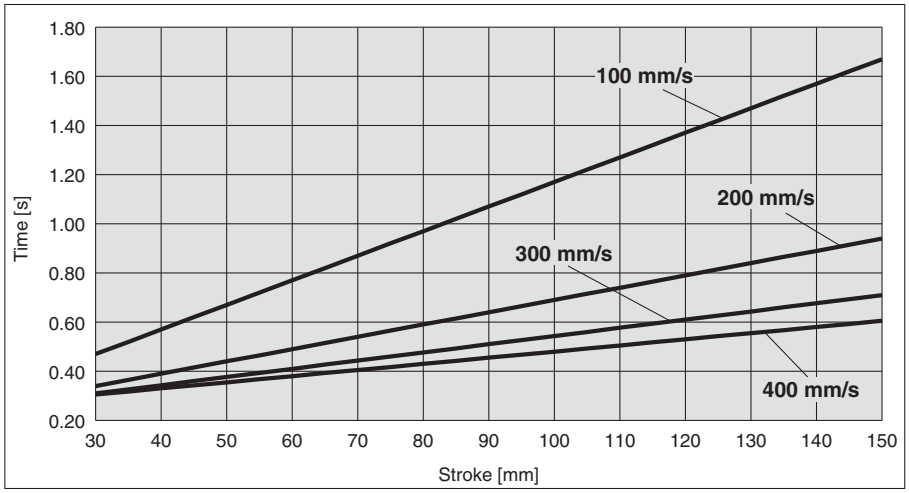

Operating Conditions

Acceleration/Deceleration: 5,000 mm/s^2

In position: 0.5

Static Allowable Moment

Model		LESH8		LESH16		LESH25		
Stroke	[mm]	50	75	50	100	50	100	150
Pitching	[N·m]	11		26	43	77	112	155
Yawing	[N·m]	11						
Rolling	[N·m]	12		48		146	177	152

Dynamic Allowable Moment

∗ This graph shows the amount of allowable overhang when the center of gravity of the workpiece overhangs in one direction. When the center of gravity of the workpiece overhangs in two directions, refer to the Electric Actuator Selection Software for confirmation. http://www.smcworld.com

Acceleration/Deceleration —— 5,000 mm/s²

Orientation	Load overhanging direction **m** : Work load [kg] **Me**: Dynamic allowable moment [N·m] **L** : Overhang to the work load center of gravity [mm]		Model		
			LESH8	**LESH16**	**LESH25**
Horizontal	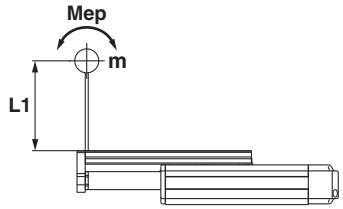	**Pitching Mep**	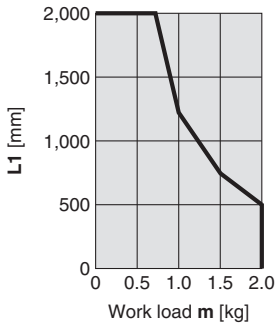	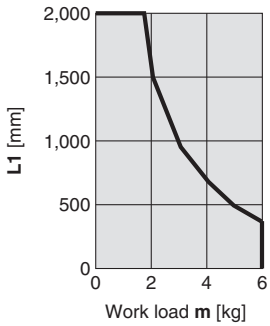	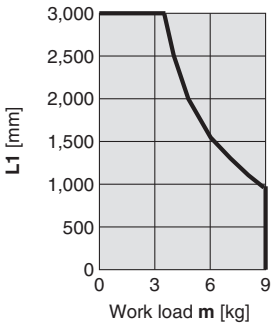
	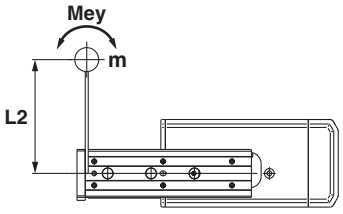	**Yawing Mey**	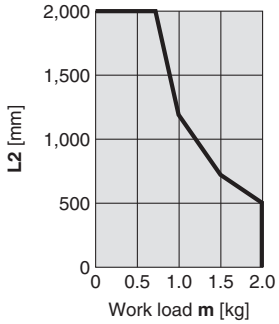	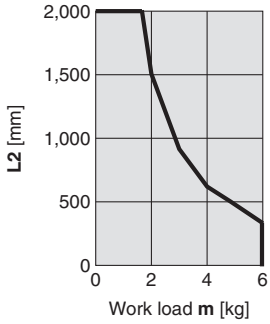	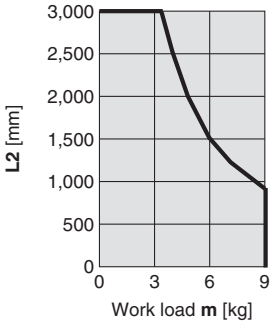
	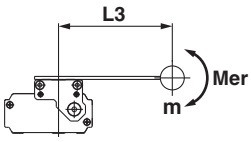	**Rolling Mer**	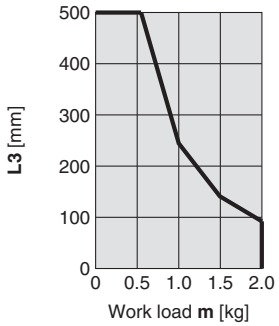	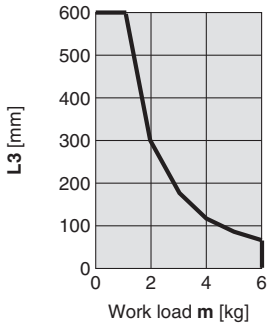	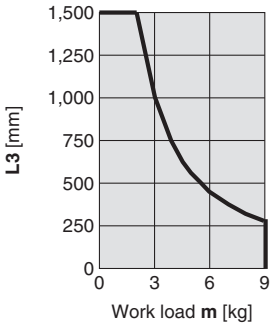
Vertical	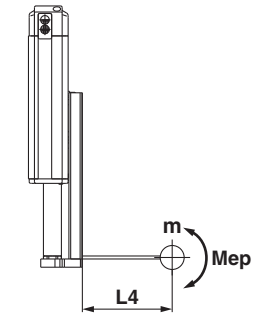	**Pitching Mep**	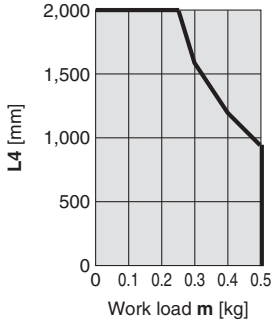	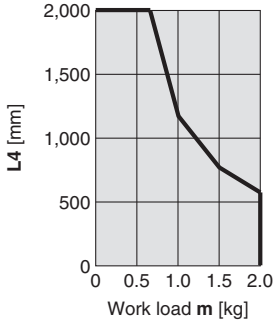	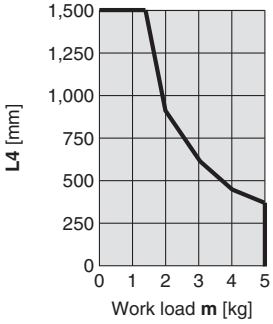
	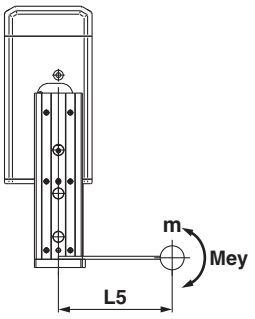	**Yawing Mey**	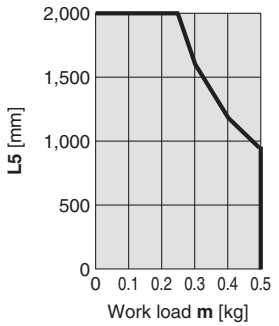	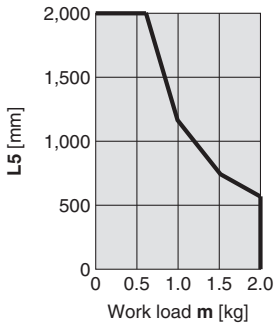	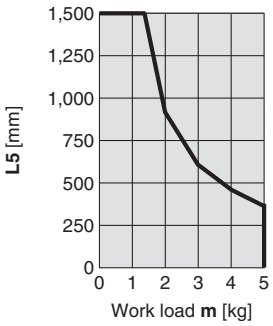

Model Selection 2

Selection Procedure

For the compact type LES series, refer to page 5.

Step 1 Check the required force. → **Step 2** Check the set value of pushing force. → **Step 3** Check the duty ratio.

Selection Example

Operating conditions

- Pushing force: 90 [N]
- Workpiece mass: 1 [kg]
- Speed: 100 [mm/s]
- Stroke: 100 [mm]
- Mounting orientation: Vertical upward
- Pushing time + Operation (A): 1.5 seconds
- All cycle time (B): 6 seconds

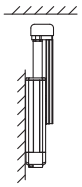

Step 1 Check the required force.

Calculate the approximate required force for pushing operation.

Selection example)
- Pushing force: 90 [N]
- Workpiece mass: 1 [kg]

Therefore, the approximate required force can be obtained as 90 + 10 = 100 [N].

Select the target model based on the approximate required force with reference to the specifications (Pages 35 and 36).

Selection example) Based on the specifications,
- Approximate required force: 100 [N]
- Speed: 100 [mm/s]

Therefore, the **LESH25□** is temporarily selected.

Then, calculate the required force for pushing operation.

If the mounting position is vertical upward, add the actuator table weight.

Selection example) Based on the <Table weight>,
- **LESH25□** table weight: 1.3 [kg]

Therefore, the required force can be obtained as 100 + 13 = 113 [N].

Step 2 Check the set value of pushing force.

<Set value of pushing force–Force graph> (Page 30)

Select the target model based on the required force with reference to the <Set value of pushing force–Force graph>, and confirm the set value of pushing force.

Selection example) Based on the graph shown on the right side,
- Required force: 113 [N]

Therefore, the **LESH25□K** is temporarily selected.

This set value of pushing force is 40 [%].

Step 3 Check the duty ratio.

Confirm the allowable duty ratio based on the set value of pushing force with reference to the <Allowable duty ratio>.

Selection example) Based on the <Allowable duty ratio>,
- Set value of pushing force: 40 [%]

Therefore, the allowable duty ratio can be obtained as 30 [%].

Calculate the duty ratio for operating conditions, and confirm it does not exceed the allowable duty ratio.

Selection example)
- Pushing time + Operation (A): 1.5 seconds
- All cycle time (B): 6 seconds

Therefore, the duty ratio can be obtained as 1.5/6 x 100 = 25 [%], and this is the allowable range.

Table Weight [kg]

Model	Stroke [mm]			
	50	75	100	150
LESH8	0.2	0.3	—	—
LESH16	0.4	—	0.7	—
LESH25	0.9	—	1.3	1.7

∗ If the mounting position is vertical upward, add the table weight.

LESH25□/Step Motor

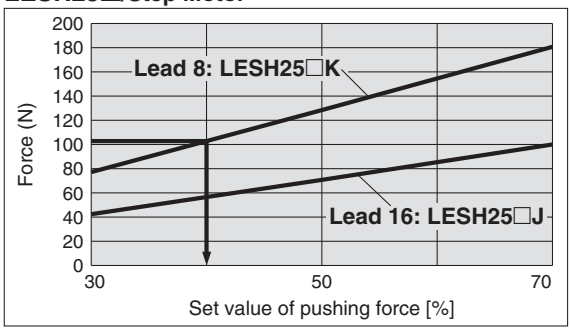

<Set value of pushing force–Force graph>

Allowable Duty Ratio

Step Motor (Servo/24 VDC)

Set value of pushing force (%)	Duty ratio (%)	Continuous pushing time (minute)
30	—	—
50 or less	30 or less	5 or less
70 or less	20 or less	3 or less

Servo Motor (24 VDC)

Set value of pushing force (%)	Duty ratio (%)	Continuous pushing time (minute)
50	—	—
75 or less	30 or less	5 or less
100 or less	20 or less	3 or less

∗ The pushing force of the LESH8□A is up to 75%.

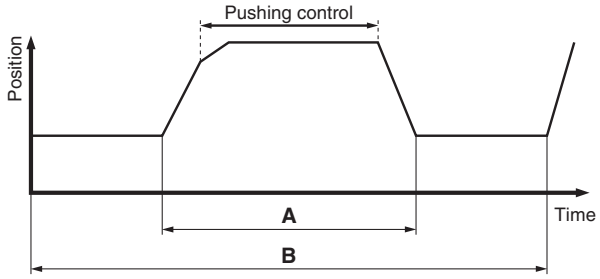

Based on the above calculation result, the LESH25□K-100 is selected.

For allowable moment, the selection procedure is the same as the positioning control.

Set Value of Pushing Force–Force Graph

Step Motor (Servo/24 VDC)

LESH8□

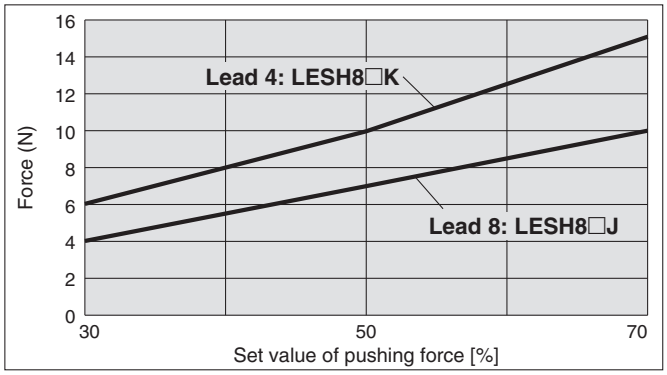

LESH16□

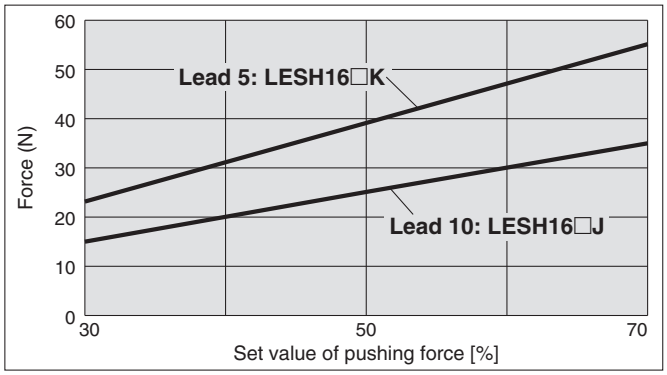

LESH25□

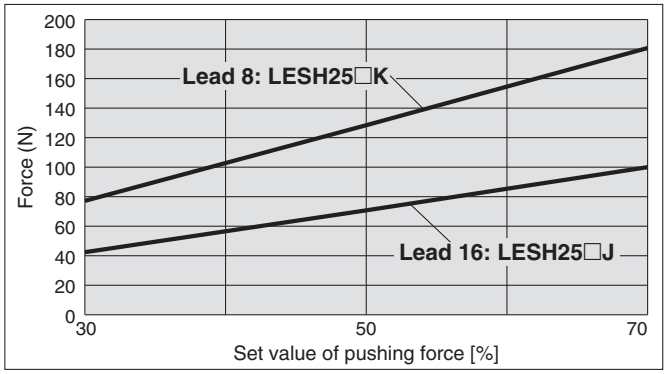

Servo Motor (24 VDC)

LESH8□A

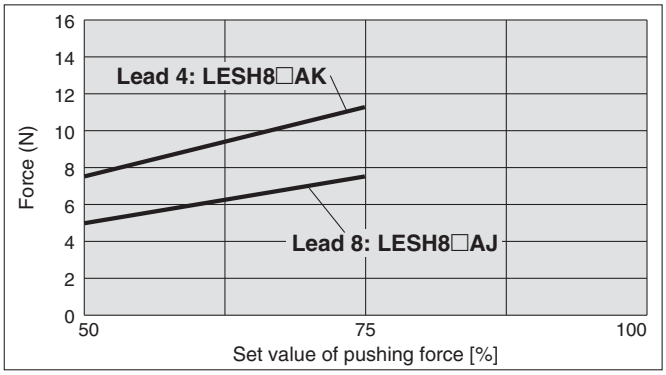

LESH16□A

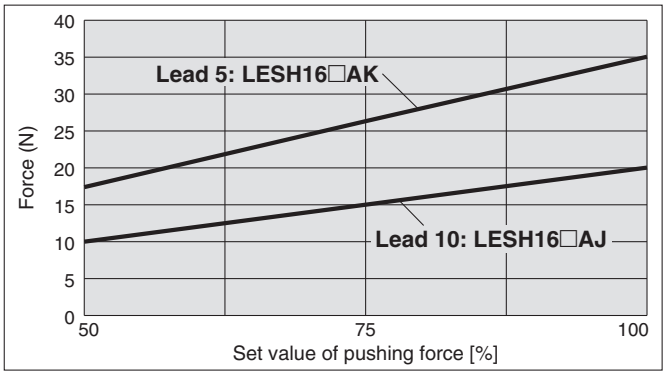

LESH25$^{R}_{L}$A

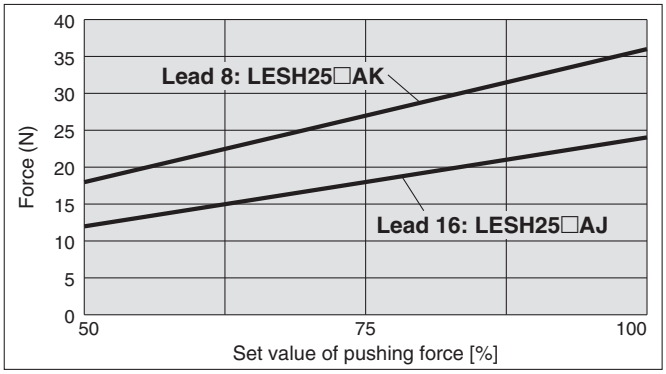

Table Accuracy

∗ These values are initial guideline values.

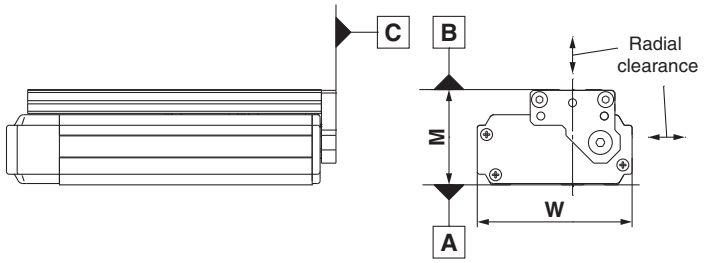

Model	LESH8	LESH16	LESH25
B side parallelism to A side [mm]	Refer to Table 1.		
B side traveling parallelism to A side [mm]	Refer to Graph 1.		
C side perpendicularity to A side [mm]	0.05	0.05	0.05
M dimension tolerance [mm]	±0.3		
W dimension tolerance [mm]	±0.2		
Radial clearance [μm]	–4 to 0	–10 to 0	–14 to 0

Table 1 B side parallelism to A side

Model	Stroke [mm]			
	50	75	100	150
LESH8	0.055	0.065	—	—
LESH16	0.05	—	0.08	—
LESH25	0.06	—	0.08	0.125

Graph 1 B side traveling parallelism to A side

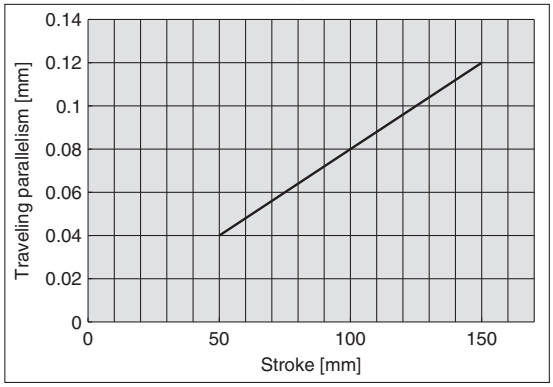

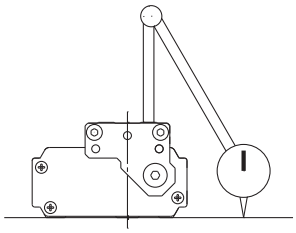

Traveling parallelism:
The amount of deflection on a dial gauge when the table travels a full stroke with the body secured on a reference base surface

Table Deflection (Reference Value)

∗ These values are initial guideline values.

Table displacement due to pitch moment load
Table displacement when loads are applied to the section marked with the arrow with the slide table stuck out.

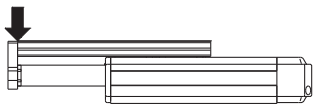

LESH8

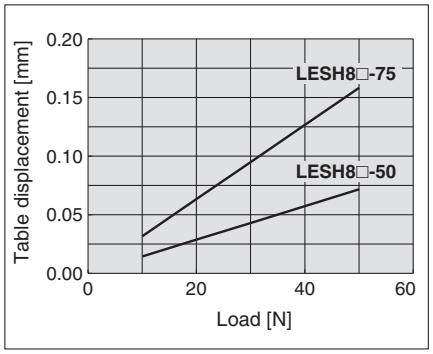

LESH16

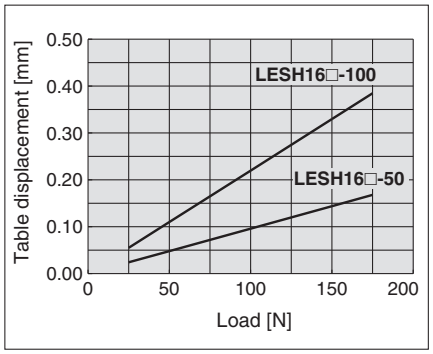

LESH25

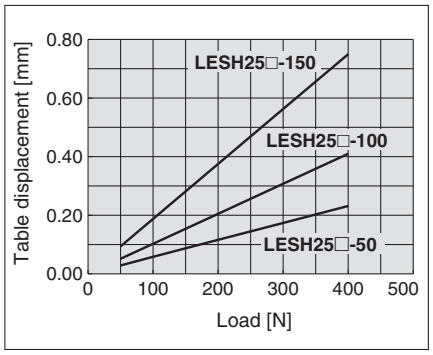

Table displacement due to yaw moment load
Table displacement when loads are applied to the section marked with the arrow with the slide table stuck out.

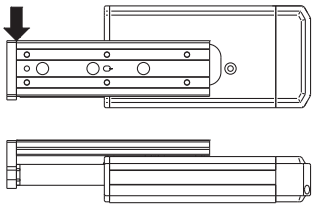

LESH8

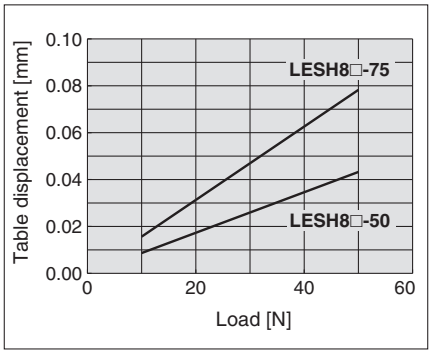

LESH16

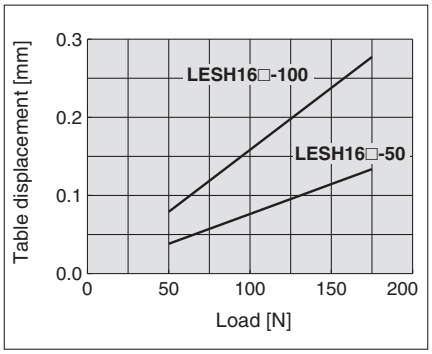

LESH25

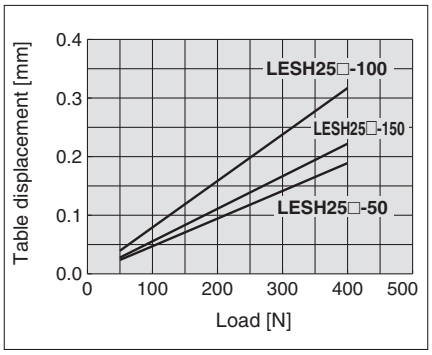

Table displacement due to roll moment load
Table displacement of section A when loads are applied to the section F with the slide table retracted.

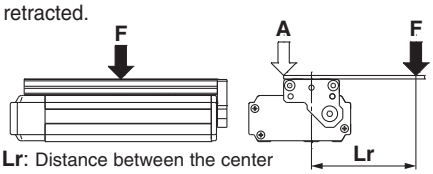

Lr: Distance between the center of the table and the work load center of gravity

LESH8

Lr = 70 mm

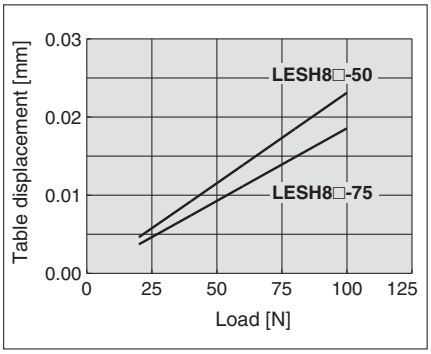

LESH16

Lr = 120 mm

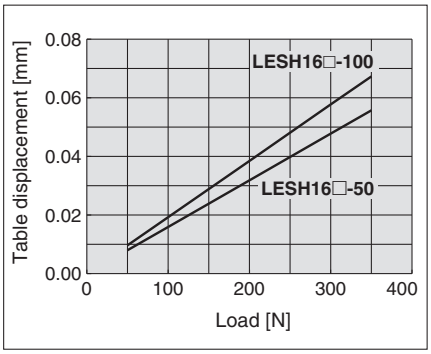

LESH25

Lr = 200 mm

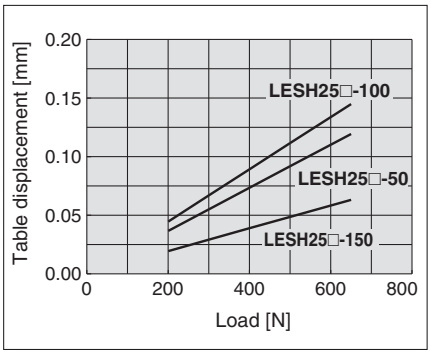

Electric Slide Table/High Rigidity Type

Step Motor (Servo/24 VDC) Servo Motor (24 VDC)

Series LESH

LESH8, 16, 25

RoHS

How to Order

LESH 8 R ☐ J – 50 ☐ ☐ ☐ – S 1 6N 1 ☐

❶ ❷ ❸ ❹ ❺ ❻ ❼ ❽ ❾ ❿ ⓫ ⓬ ⓭

❶ Size

8
16
25

❷ Motor mounting position

R — Basic type/R type

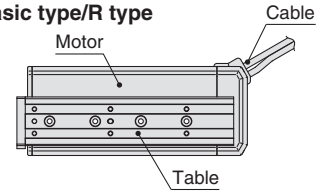

L — Symmetrical type/L type

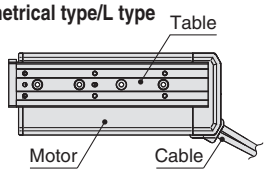

D — In-line motor type/D type

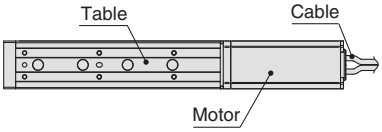

❸ Motor type

Symbol	Type	Compatible controllers/ driver
Nil	Step motor (Servo/24 VDC)	LECP6 LECP1 LECPA
A	Servo motor* (24 VDC)	LECA6

∗ LESH25DA is not available.

⚠ Caution

[CE-compliant products]

① EMC compliance was tested by combining the electric actuator LES series and the controller LEC series.
The EMC depends on the configuration of the customer's control panel and the relationship with other electrical equipment and wiring. Therefore conformity to the EMC directive cannot be certified for SMC components incorporated into the customer's equipment under actual operating conditions. As a result it is necessary for the customer to verify conformity to the EMC directive for the machinery and equipment as a whole.

② For the servo motor (24 VDC) specification, EMC compliance was tested by installing a noise filter set (LEC-NFA).
Refer to page 61 for the noise filter set.
Refer to the LECA Operation Manual for installation.

[UL-compliant products]

When conformity to UL is required, the electric actuator and controller/driver should be used with a UL1310 Class 2 power supply.

❹ Lead [mm]

Symbol	LESH8	LESH16	LESH25
J	8	10	16
K	4	5	8

❺ Stroke [mm]

Model \ Stroke	50	75	100	150
LESH8	●*	●	—	—
LESH16	●*	—	●	—
LESH25	●	—	●	●

∗ R/L type with lock is not available.

❻ Motor option

Nil	Without option
B	With lock

❼ Body option

Nil	Without option
S	Dustproof specification*

∗ For R/L type (IP5X equivalent), a scraper is mounted on the rod cover, and gaskets are mounted on both the end covers. For D type, a scraper is mounted on the rod cover.

The actuator and controller/driver are sold as a package.

Confirm that the combination of the controller/driver and the actuator is correct.

<Check the following before use.>

① Check the actuator label for model number. This matches the controller/driver.

② Check Parallel I/O configuration matches (NPN or PNP).

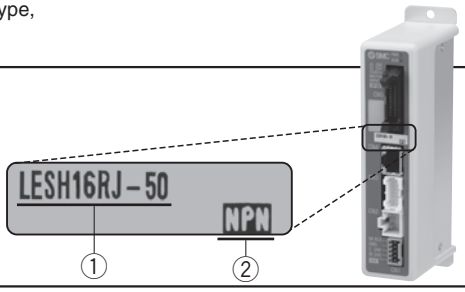

∗ Refer to the operation manual for using the products. Please download it via our website, http://www.smcworld.com

Basic type (R type)

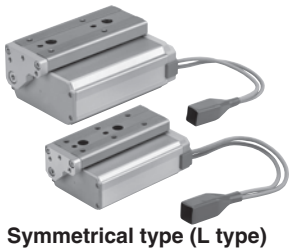

Symmetrical type (L type)

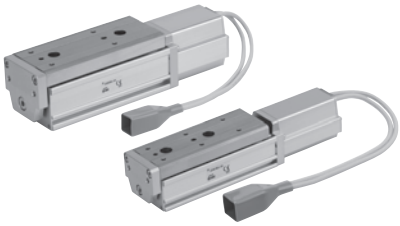

In-line motor type (D type)

❽ Mounting*

Symbol	Mounting	R type L type	D type
Nil	Without side holder	●	●
H	With side holder (4 pcs.)	—	●

* Refer to page 48 for details.

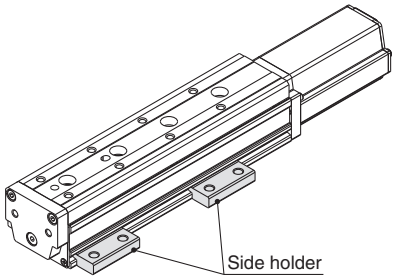

❾ Actuator cable type*1

Nil	Without cable
S	Standard cable*2
R	Robotic cable (Flexible cable)

*1 The standard cable should be used on fixed parts. For using on moving parts, select the robotic cable.
*2 Only available for the motor type "Step motor."

❿ Actuator cable length [m]

Nil	Without cable
1	1.5
3	3
5	5
8	8*
A	10*
B	15*
C	20*

* Produced upon receipt of order (Robotic cable only) Refer to the specifications Note 3) on page 35.

⓫ Controller/Driver type*1

Nil	Without controller/driver	
6N	**LECP6/LECA6** (Step data input type)	NPN
6P		PNP
1N	**LECP1***2 (Programless type)	NPN
1P		PNP
AN	**LECPA***2 (Pulse input type)	NPN
AP		PNP

*1 Refer to page 52 for the detailed specifications of the controller/driver.
*2 Only available for the motor type "Step motor."

⓬ I/O cable length [m]*1

Nil	Without cable
1	1.5
3	3*2
5	5*2

*1 When "Without controller/driver" is selected for controller/driver types, I/O cable cannot be selected. Refer to page 61 (For LECP6/LECA6), page 74 (For LECP1) or page 81 (For LECPA) if I/O cable is required.
*2 When "Pulse input type" is selected for controller/driver types, pulse input usable only with differential. Only 1.5 m cables usable with open collector.

⓭ Controller/Driver mounting

Nil	Screw mounting
D	DIN rail mounting*

* DIN rail is not included. Order it separately. Refer to page 54 for details.

Compatible Controllers/Driver

Type	Step data input type 	Step data input type 	Programless type 	Pulse input type 
Series	**LECP6**	**LECA6**	**LECP1**	**LECPA**
Features	Value (Step data) input Standard controller		Capable of setting up operation (step data) without using a PC or teaching box	Operation by pulse signals
Compatible motor	Step motor (Servo/24 VDC)	Servo motor (24 VDC)	Step motor (Servo/24 VDC)	
Maximum number of step data	64 points		14 points	—
Power supply voltage	24 VDC			
Reference page	Page 53		Page 68	Page 75

Specifications

Step Motor (Servo/24 VDC)

Model			LESH8□		LESH16□		LESH25□	
Actuator specifications	Stroke [mm]		50, 75		50, 100		50, 100, 150	
	Work load [kg] Note 1) 3)	Horizontal	2	1	6	4	9	6
		Vertical	0.5	0.25	2	1	4	2
	Pushing force [N] 30% to 70% Note 2) 3)		6 to 15	4 to 10	23.5 to 55	15 to 35	77 to 180	43 to 100
	Speed [mm/s] Note 1) 3)		10 to 200	20 to 400	10 to 200	20 to 400	10 to 150	20 to 400
	Pushing speed [mm/s]		10 to 20	20	10 to 20	20	10 to 20	20
	Max. acceleration/deceleration [mm/s²]		5,000					
	Positioning repeatability [mm]		±0.05					
	Screw lead [mm]		4	8	5	10	8	16
	Impact/Vibration resistance [m/s²] Note 4)		50/20					
	Actuation type		Slide screw + Belt (R/L type), Slide screw (D type)					
	Guide type		Linear guide (Circulating type)					
	Operating temperature range [°C]		5 to 40					
	Operating humidity range [%RH]		90 or less (No condensation)					
Electric specifications	Motor size		□20		□28		□42	
	Motor type		Step motor (Servo/24 VDC)					
	Encoder		Incremental A/B phase (800 pulse/rotation)					
	Rated voltage [V]		24 VDC ±10%					
	Power consumption [W] Note 5)		20		43		67	
	Standby power consumption when operating [W] Note 6)		7		15		13	
	Max. instantaneous power consumption [W] Note 7)		35		60		74	
Lock unit specifications	Type	Note 8)	Non-magnetizing lock					
	Holding force [N]	Note 8)	24	2.5	300	48	500	77
	Power consumption [W] Note 9)	Note 8)	4		3.6		5	
	Rated voltage [V]	Note 8)	24 VDC ±10%					

Note 1) Speed changes according to the work load. Check “Speed–Work Load Graph (Guide)” on page 26.
Note 2) Pushing force accuracy is ±20% (F.S.).
Note 3) The speed and force may change depending on the cable length, load and mounting conditions. Furthermore, if the cable length exceeds 5 m, then it will decrease by up to 10% for each 5 m. (At 15 m: Reduced by up to 20%)
Note 4) Vibration resistance: No malfunction occurred in a test ranging between 45 to 2000 Hz. Test was performed in both an axial direction and a perpendicular direction to the lead screw. (Test was performed with the actuator in the initial state.)
Impact resistance: No malfunction occurred when the actuator was tested with a drop tester in both an axial direction and a perpendicular direction to the lead screw. (Test was performed with the actuator in the initial state.)
Note 5) The power consumption (including the controller) is for when the actuator is operating.
Note 6) The standby power consumption when operating (including the controller) is for when the actuator is stopped in the set position during the operation. Except during the pushing operation.
Note 7) The maximum instantaneous power consumption (including the controller) is for when the actuator is operating. This value can be used for the selection of the power supply.
Note 8) With lock only
Note 9) For an actuator with lock, add the power consumption for the lock.

Specifications

Servo Motor (24 VDC)

Model			LESH8□A		LESH16□A		LESH25$^{R}_{L}$A Note 1)	
Actuator specifications	Stroke [mm]		50, 75		50, 100		50, 100, 150	
	Work load [kg]	Horizontal	2	1	5	2.5	6	4
		Vertical	0.5	0.25	2	1	2.5	1.5
	Pushing force 50 to 100% [N] Note 2)		7.5 to 11	5 to 7.5	17.5 to 35	10 to 20	18 to 36	12 to 24
	Speed [mm/s]		10 to 200	20 to 400	10 to 200	20 to 400	10 to 150	20 to 400
	Pushing speed [mm/s] Note 2)		10 to 20	20	10 to 20	20	10 to 20	20
	Max. acceleration/deceleration [mm/s²]		5,000					
	Positioning repeatability [mm]		±0.05					
	Screw lead [mm]		4	8	5	10	8	16
	Impact/Vibration resistance [m/s²] Note 3)		50/20					
	Actuation type		Slide screw + Belt (R/L type), Slide screw (D type)					
	Guide type		Linear guide (Circulating type)					
	Operating temperature range [°C]		5 to 40					
	Operating humidity range [%RH]		90 or less (No condensation)					
Electric specifications	Motor size		□20		□28		□42	
	Motor output [W]		10		30		36	
	Motor type		Servo motor (24 VDC)					
	Encoder		Incremental A/B/Z phase (800 pulse/rotation)					
	Rated voltage [V]		24 VDC ±10%					
	Power consumption [W] Note 4)		58		84		144	
	Standby power consumption when operating [W] Note 5)		4 (Horizontal)/7 (Vertical)		2 (Horizontal)/15 (Vertical)		4 (Horizontal)/43 (Vertical)	
	Max. instantaneous power consumption [W] Note 6)		84		124		158	
Lock unit specifications	Type	Note 7)	Non-magnetizing lock					
	Holding force [N]	Note 7)	24	2.5	300	48	500	77
	Power consumption [W] Note 8)	Note 7)	3.5		2.9		5	
	Rated voltage [V]	Note 7)	24 VDC ±10%					

Note 1) LESH25DA is not available.
Note 2) The pushing force values for LESH8□A is 50% to 75%. Pushing force accuracy is ±20% (F.S.).
Note 3) Vibration resistance: No malfunction occurred in a test ranging between 45 to 2000 Hz. Test was performed in both an axial direction and a perpendicular direction to the lead screw. (Test was performed with the actuator in the initial state.)
Impact resistance: No malfunction occurred when the actuator was tested with a drop tester in both an axial direction and a perpendicular direction to the lead screw. (Test was performed with the actuator in the initial state.)
Note 4) The power consumption (including the controller) is for when the actuator is operating.
Note 5) The standby power consumption when operating (including the controller) is for when the actuator is stopped in the set position during the operation. Except during the pushing operation.
Note 6) The maximum instantaneous power consumption (including the controller) is for when the actuator is operating. This value can be used for the selection of the power supply.
Note 7) With lock only
Note 8) For an actuator with lock, add the power consumption for the lock.

Weight

Step Motor (Servo/24 VDC), Servo Motor (24 VDC) Common

Model		Basic type/R type, Symmetrical type/L type							In-line motor type/D type						
		LESH8$^{R}_{L}$(A)		LESH16$^{R}_{L}$(A)		LESH25$^{R}_{L}$(A)			LESH8D(A)		LESH16D(A)		LESH25D		
Stroke [mm]		50	75	50	100	50	100	150	50	75	50	100	50	100	150
Product weight [kg]	Without lock	0.55	0.70	1.15	1.60	2.50	3.30	4.26	0.57	0.70	1.25	1.70	2.52	3.27	3.60
	With lock	—	0.76	—	1.71	2.84	3.64	4.60	0.63	0.76	1.36	1.81	2.86	3.61	3.94

Construction: Basic Type/R Type, Symmetrical Type/L Type

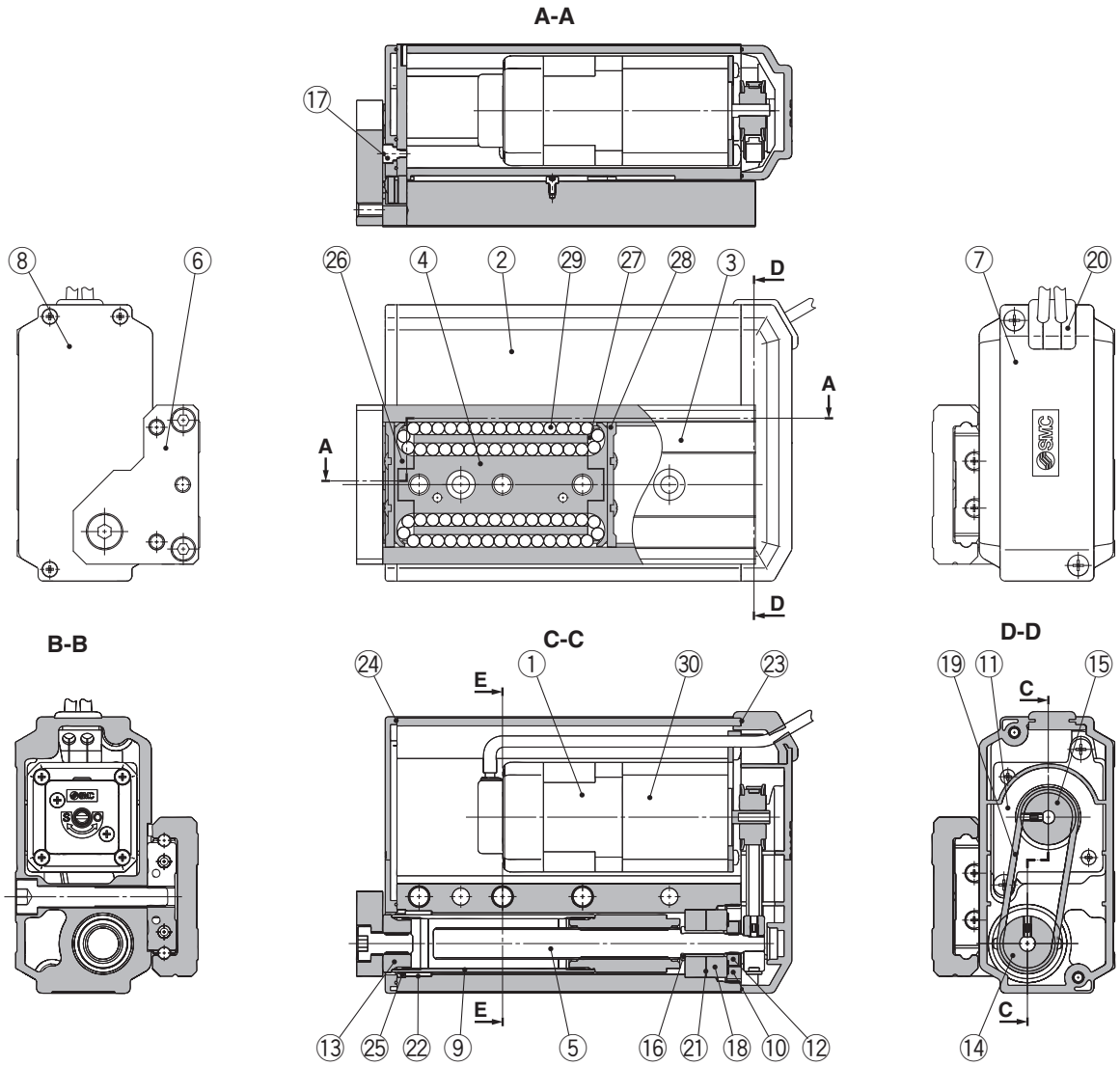

Component Parts

No.	Description	Material	Note
1	**Motor**	—	—
2	**Body**	Aluminum alloy	Anodized
3	**Table**	Stainless steel	Heat treatment + Electroless nickel plated
4	**Guide block**	Stainless steel	Heat treatment
5	**Lead screw**	Stainless steel	Heat treatment + Specially treated
6	**End plate**	Aluminum alloy	Anodized
7	**Pulley cover**	Synthetic resin	—
8	**End cover**	Synthetic resin	—
9	**Rod**	Stainless steel	—
10	**Bearing stopper**	Structural steel	Electroless nickel plated
		Brass	Electroless nickel plated (LESH25R/L□ only)
11	**Motor plate**	Structural steel	
12	**Lock nut**	Structural steel	Chromate treated
13	**Socket**	Structural steel	Electroless nickel plated
14	**Lead screw pulley**	Aluminum alloy	—
15	**Motor pulley**	Aluminum alloy	—
16	**Spacer**	Stainless steel	LESH25R/L□ only
17	**Origin stopper**	Structural steel	Electroless nickel plated
18	**Bearing**	—	—
19	**Belt**	—	—
20	**Grommet**	Synthetic resin	—
21	**Sim ring**	Structural steel	—
22	**Bushing**	—	Dustproof specification only
23	**Pulley gasket**	NBR	Dustproof specification only
24	**End gasket**	NBR	Dustproof specification only
25	**Scraper**	NBR	Dustproof specification only/Rod
26	**Cover**	Synthetic resin	—
27	**Return guide**	Synthetic resin	—
28	**Scraper**	Stainless steel + NBR	Linear guide
29	**Steel ball**	Special steel	—
30	**Lock**	—	With lock only

Replacement Parts/Belt

Model	Order no.
LESH8□	LE-D-1-1
LESH16□	LE-D-1-2
LESH25□	LE-D-1-3
LESH25□A	LE-D-1-4

Replacement Parts/Grease Pack

Applied portion	Order no.
Guide unit	GR-S-010 (10 g) GR-S-020 (20 g)

Construction: In-line Motor Type/D Type

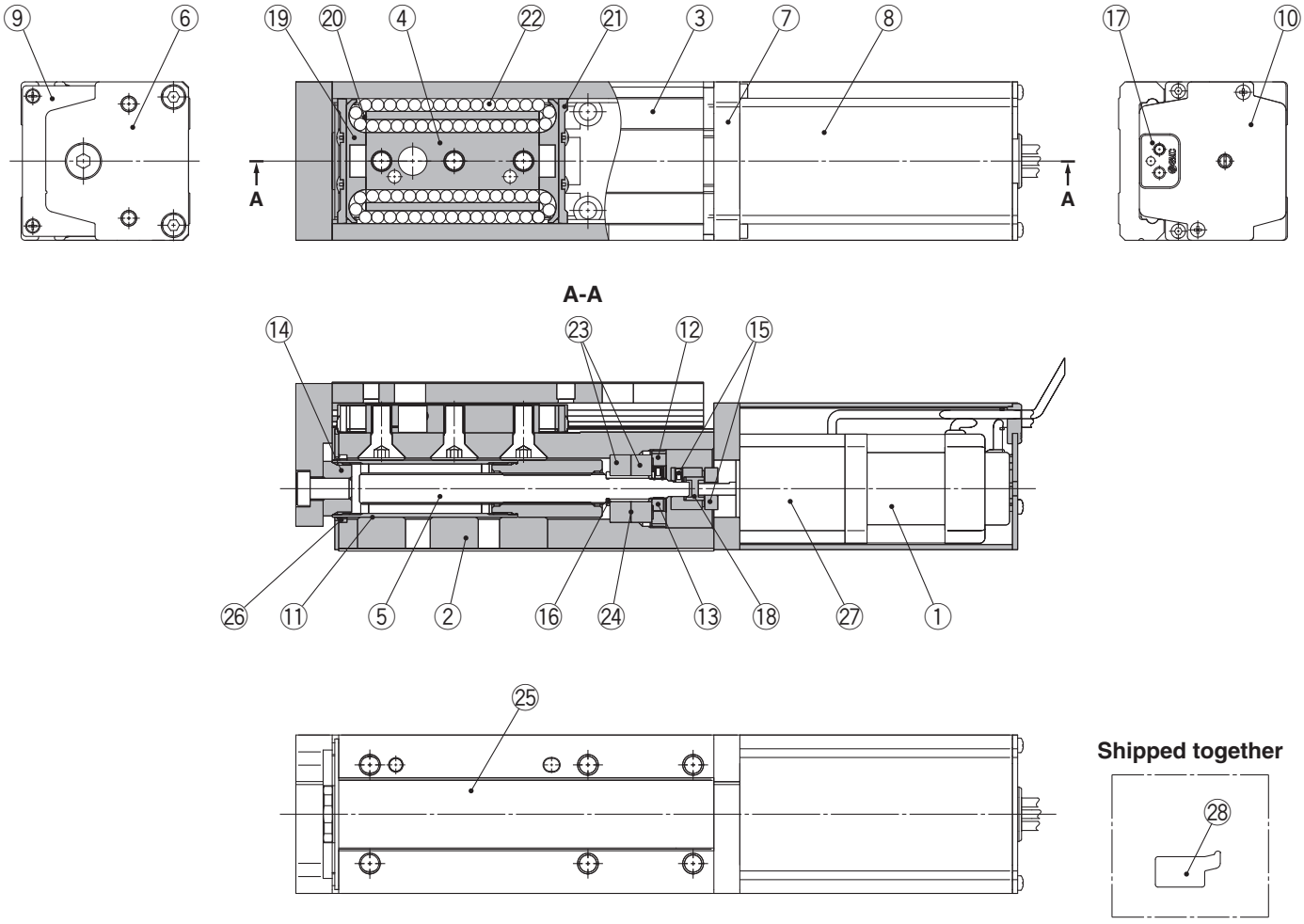

Component Parts

No.	Description	Material	Note
1	**Motor**	—	—
2	**Body**	Aluminum alloy	Anodized
3	**Table**	Stainless steel	Heat treatment + Electroless nickel plated
4	**Guide block**	Stainless steel	Heat treatment
5	**Lead screw**	Stainless steel	Heat treatment + Specially treated
6	**End plate**	Aluminum alloy	Anodized
7	**Motor flange**	Aluminum alloy	Anodized
8	**Motor cover**	Aluminum alloy	Anodized
9	**End cover**	Aluminum alloy	Anodized
10	**Motor end cover**	Aluminum alloy	Anodized
11	**Rod**	Stainless steel	—
12	**Bearing stopper**	Structural steel	Electroless nickel plated
		Brass	Electroless nickel plated (LESH25D□ only)
13	**Socket**	Structural steel	Electroless nickel plated
14	**Hub (Lead screw side)**	Aluminum alloy	—
15	**Hub (Motor side)**	Aluminum alloy	—
16	**Spacer**	Stainless steel	LESH25D□ only
17	**Grommet**	NBR	—
18	**Spider**	NBR	—
19	**Cover**	Synthetic resin	—
20	**Return guide**	Synthetic resin	—
21	**Scraper**	Stainless steel + NBR	Linear guide

No.	Description	Material	Note
22	**Steel ball**	Special steel	—
23	**Bearing**	—	—
24	**Sim ring**	Structural steel	—
25	**Masking tape**	—	—
26	**Scraper**	NBR	Dustproof specification only/ Rod
27	**Lock**	—	With lock only
28	**Side holder**	Aluminum alloy	Anodized

Optional Parts/Side Holder

Model	Order no.
LESH8D	LE-D-3-1
LESH16D	LE-D-3-2
LESH25D	LE-D-3-3

Replacement Parts/Grease Pack

Applied portion	Order no.
Guide unit	GR-S-010 (10 g) GR-S-020 (20 g)

Dimensions: Basic Type/R Type

LESH8R

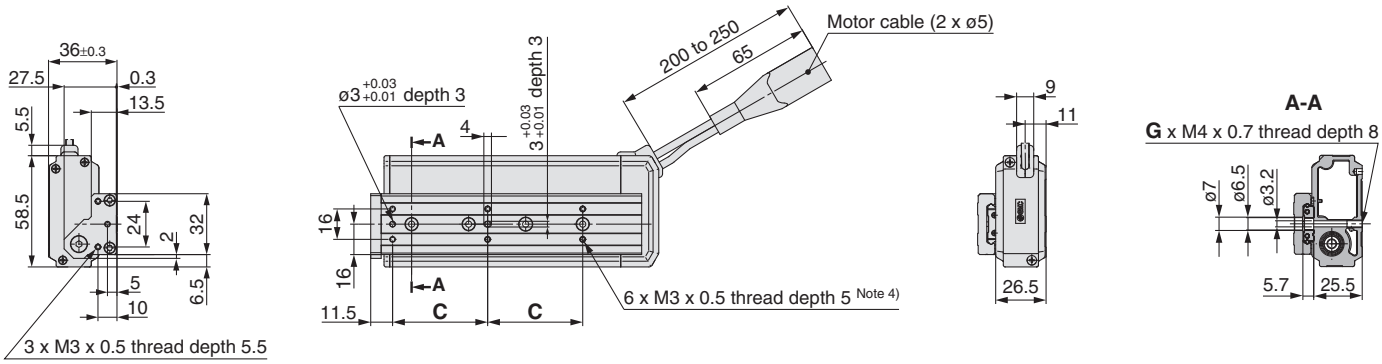

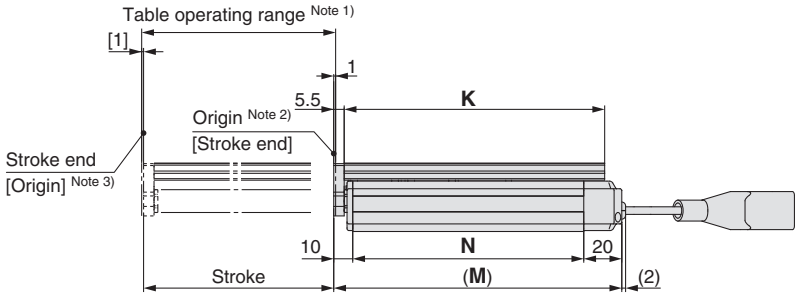

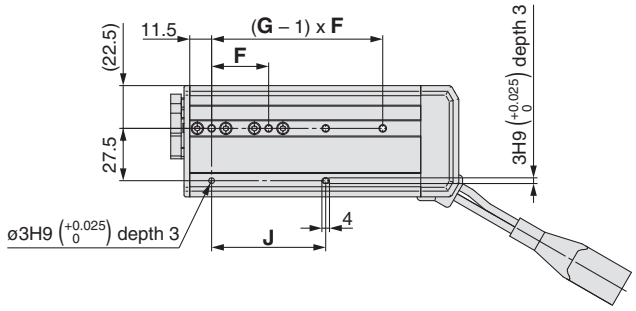

With lock

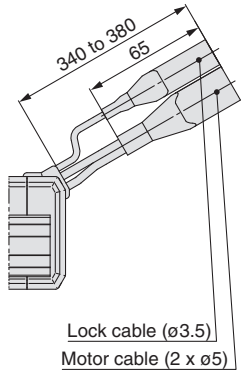

Connector

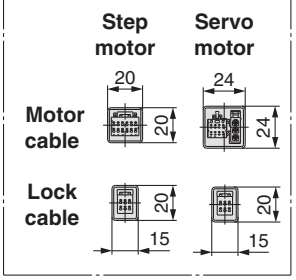

[mm]

Model	C	F	G	J	K	M	N
LESH8R□□-50□□-□□□□□	46	29	3	58	111	125.5	95.5
LESH8R□□-75□□-□□□□□	50	30	4	60	137	151.5	121.5

Note 1) Range within which the table can move when it returns to origin. Make sure a workpiece mounted on the table does not interfere with the workpieces and facilities around the table.
Note 2) Position after return to origin.
Note 3) The number in brackets indicates when the direction of return to origin has changed.
Note 4) If workpiece fixing bolts are too long, they can touch the guide block and cause a malfunction, etc. Use bolts that are between the maximum and minimum screw-in depths in length.

Dimensions: Basic Type/R Type

LESH16R

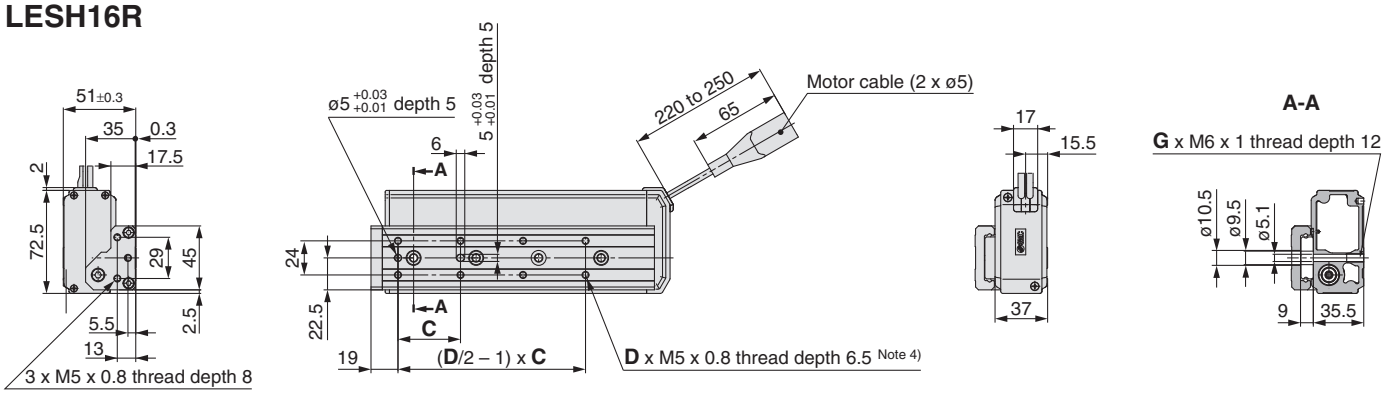

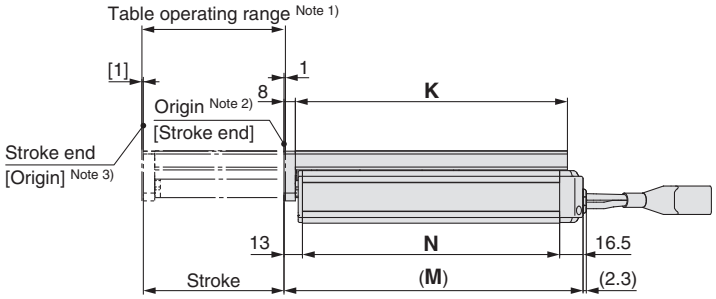

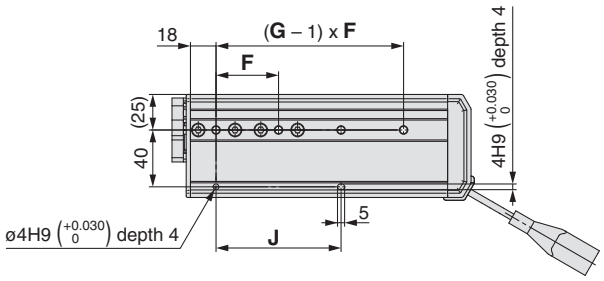

With lock

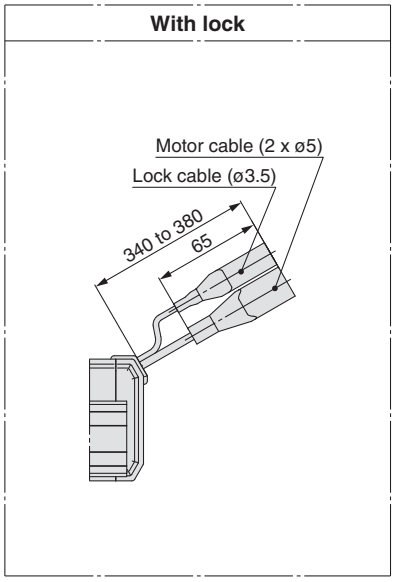

Connector

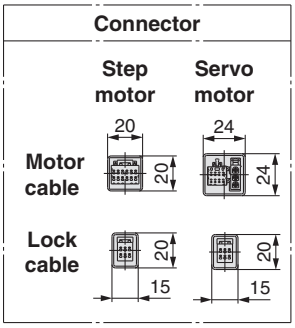

[mm]

Model	C	D	F	G	J	K	M	N
LESH16R□□-50□□-□□□□□	40	6	45	2	45	116.5	135.5	106
LESH16R□□-100□□-□□□□□	44	8	44	4	88	191.5	210.5	181

Note 1) Range within which the table can move when it returns to origin. Make sure a workpiece mounted on the table does not interfere with the workpieces and facilities around the table.
Note 2) Position after return to origin.
Note 3) The number in brackets indicates when the direction of return to origin has changed.
Note 4) If workpiece fixing bolts are too long, they can touch the guide block and cause a malfunction, etc. Use bolts that are between the maximum and minimum screw-in depths in length.

Dimensions: Basic Type/R Type

LESH25R

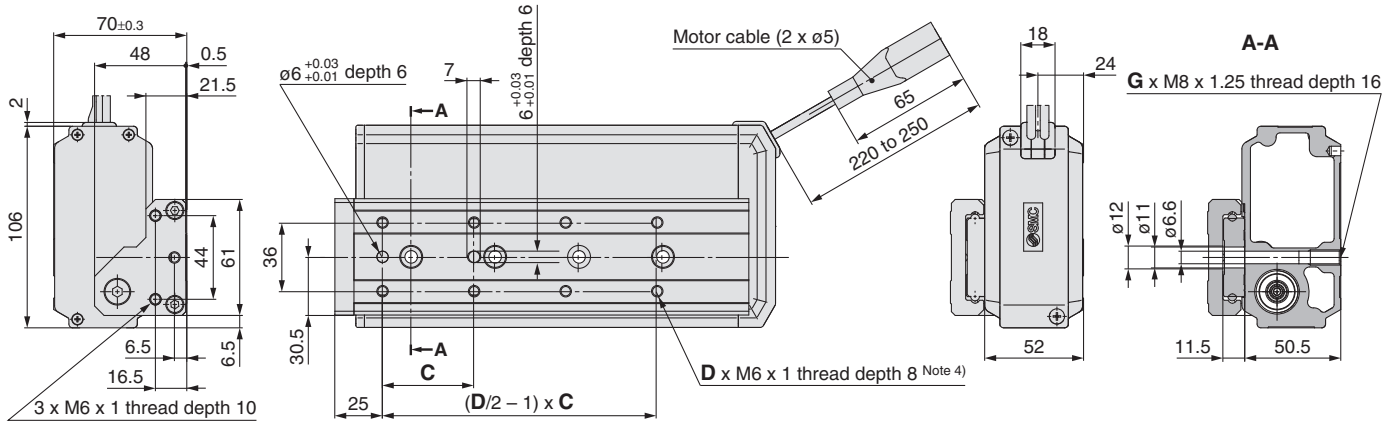

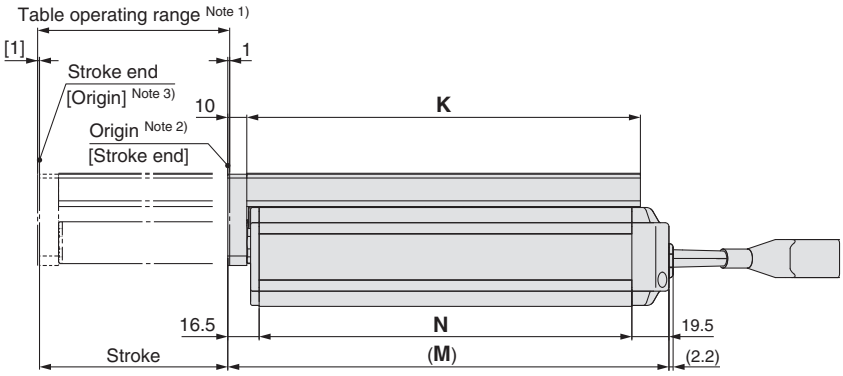

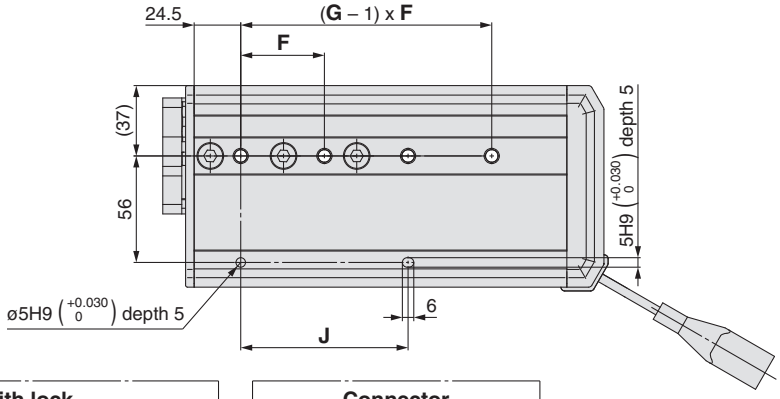

With lock

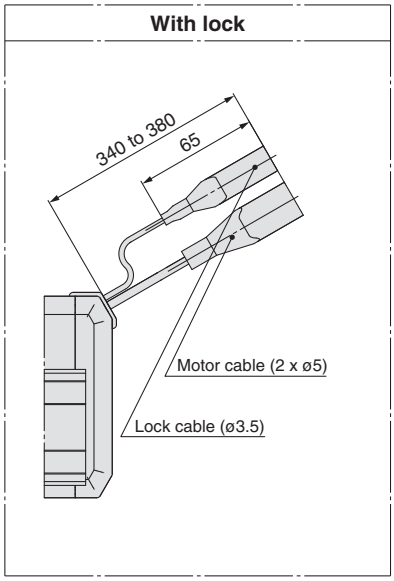

Connector

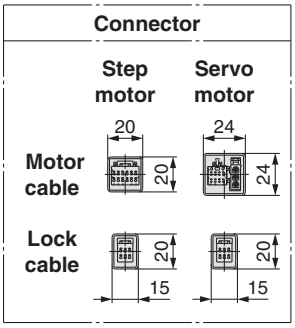

[mm]

Model	C	D	F	G	J	K	M	N
LESH25R□□-50□□-□□□□□	75	4	80	2	80	143	168	132
LESH25R□□-100□□-□□□□□	48	8	44	4	88	207	232	196
LESH25R□□-150□□-□□□□□	65	8	66	4	132	285	310	274

Note 1) Range within which the table can move when it returns to origin. Make sure a workpiece mounted on the table does not interfere with the workpieces and facilities around the table.
Note 2) Position after return to origin.
Note 3) The number in brackets indicates when the direction of return to origin has changed.
Note 4) If workpiece fixing bolts are too long, they can touch the guide block and cause a malfunction, etc. Use bolts that are between the maximum and minimum screw-in depths in length.

Dimensions: Symmetrical Type/L Type

LESH8L

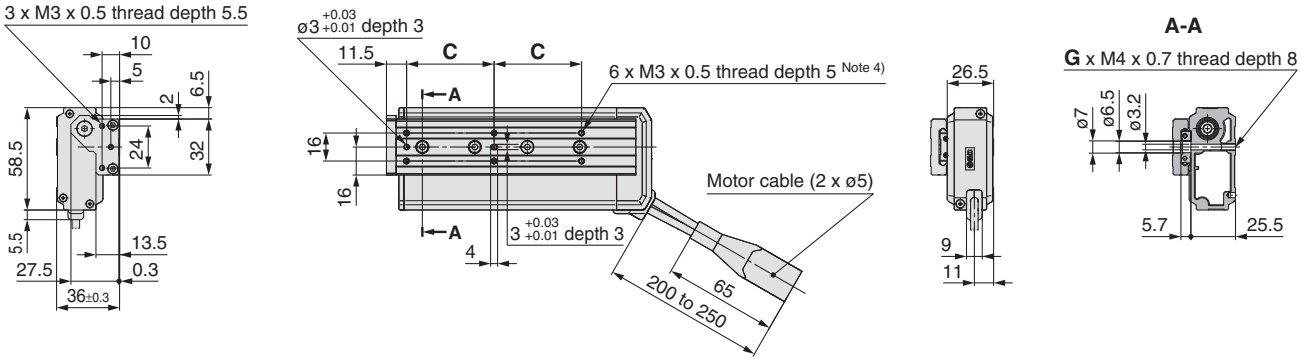

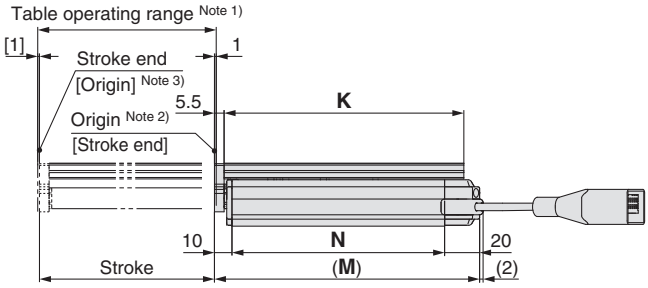

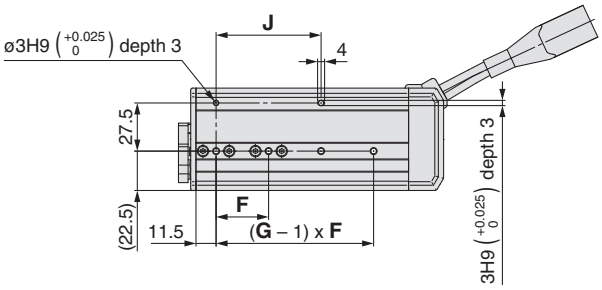

With lock

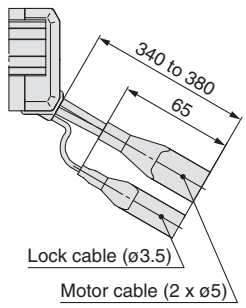

Connector

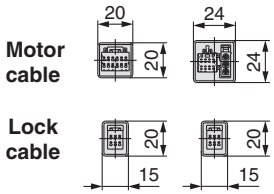

[mm]

Model	C	F	G	J	K	M	N
LESH8L□□-50□□-□□□□□	46	29	3	58	111	125.5	95.5
LESH8L□□-75□□-□□□□□	50	30	4	60	137	151.5	121.5

Note 1) Range within which the table can move when it returns to origin. Make sure a workpiece mounted on the table does not interfere with the workpieces and facilities around the table.
Note 2) Position after return to origin.
Note 3) The number in brackets indicates when the direction of return to origin has changed.
Note 4) If workpiece fixing bolts are too long, they can touch the guide block and cause a malfunction, etc. Use bolts that are between the maximum and minimum screw-in depths in length.

Dimensions: Symmetrical Type/L Type

LESH16L

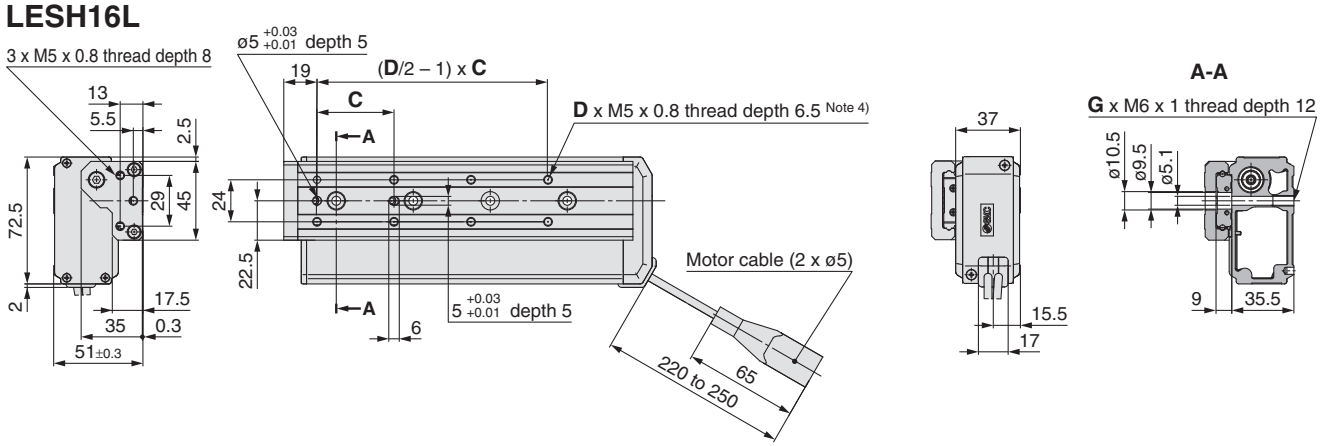

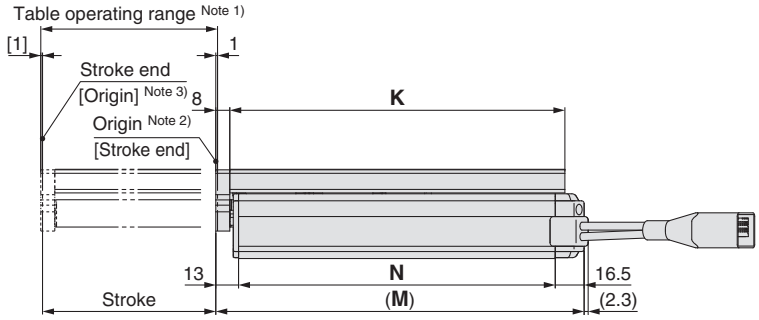

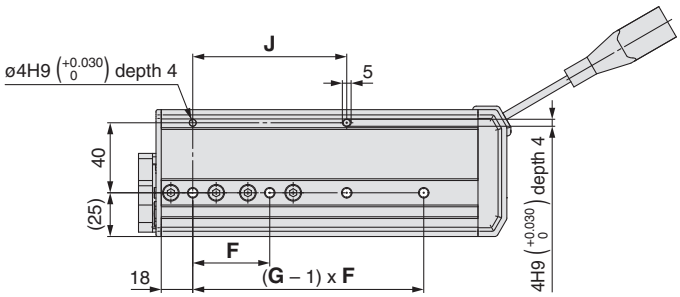

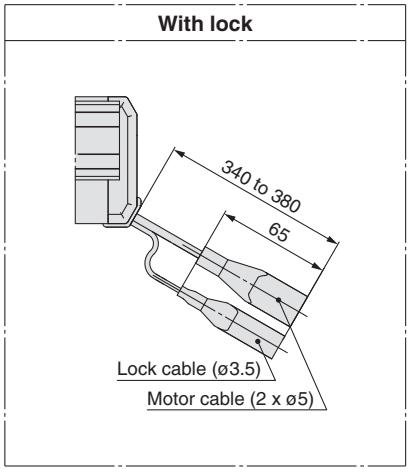

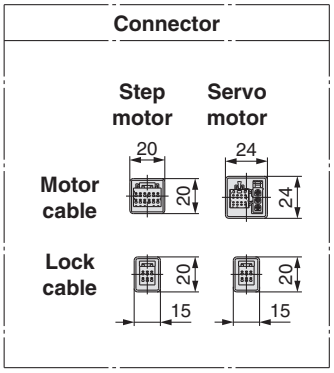

[mm]

Model	C	D	F	G	J	K	M	N
LESH16L□□-50□□-□□□□□	40	6	45	2	45	116.5	135.5	106
LESH16L□□-100□□-□□□□□	44	8	44	4	88	191.5	210.5	181

Note 1) Range within which the table can move when it returns to origin. Make sure a workpiece mounted on the table does not interfere with the workpieces and facilities around the table.
Note 2) Position after return to origin.
Note 3) The number in brackets indicates when the direction of return to origin has changed.
Note 4) If workpiece fixing bolts are too long, they can touch the guide block and cause a malfunction, etc. Use bolts that are between the maximum and minimum screw-in depths in length.

Dimensions: Symmetrical Type/L Type

LESH25L

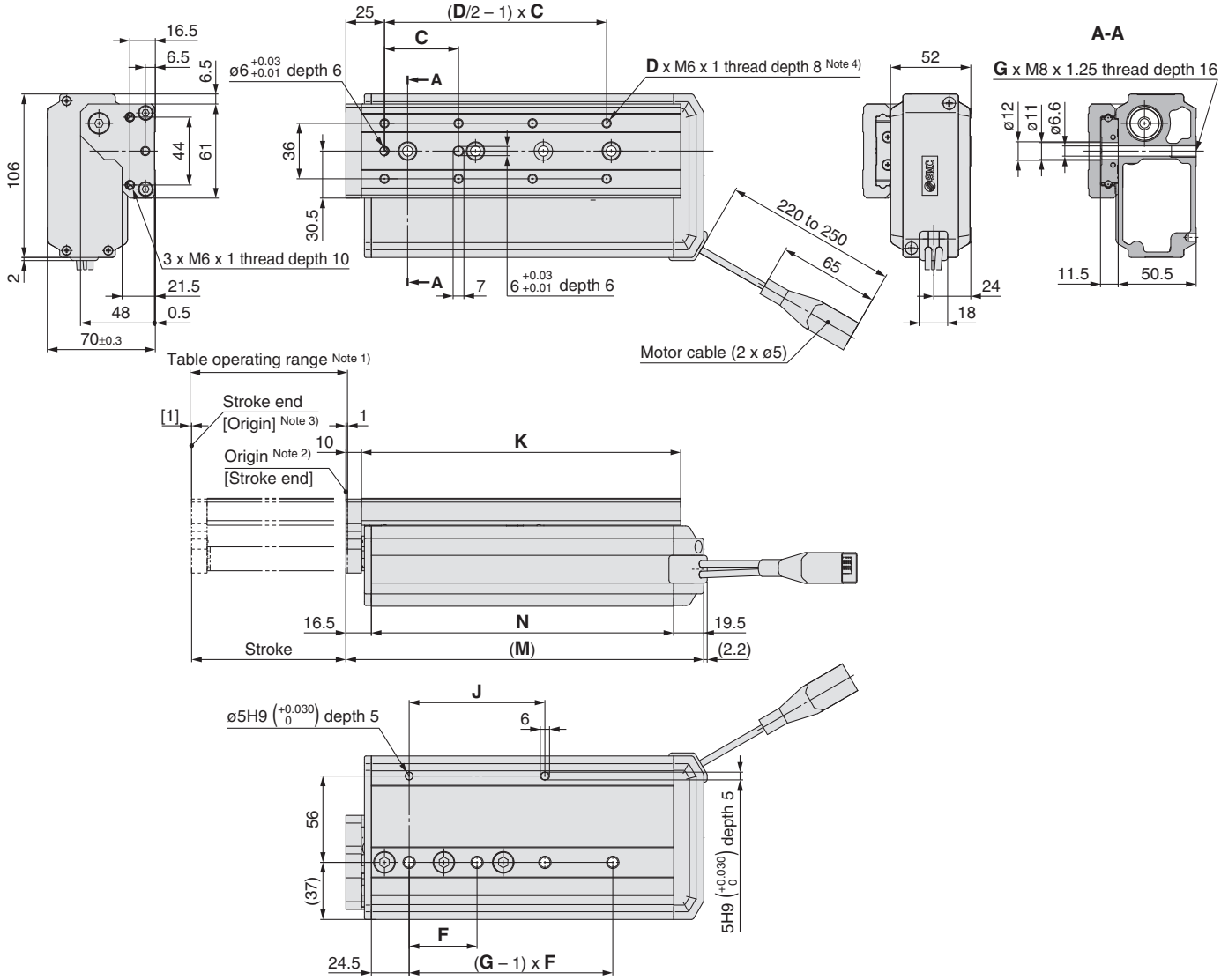

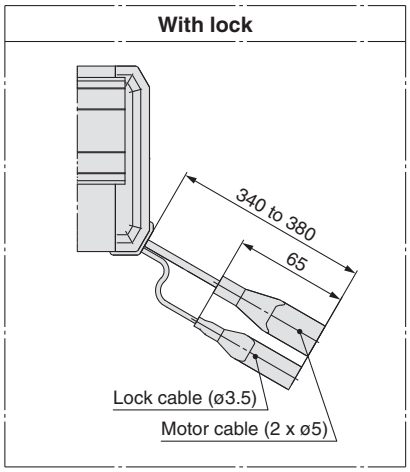

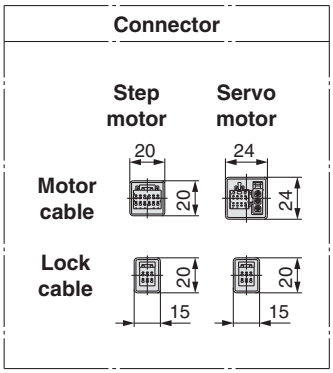

[mm]

Model	C	D	F	G	J	K	M	N
LESH25L□□-50□□-□□□□□	75	4	80	2	80	143	168	132
LESH25L□□-100□□-□□□□□	48	8	44	4	88	207	232	196
LESH25L□□-150□□-□□□□□	65	8	66	4	132	285	310	274

Note 1) Range within which the table can move when it returns to origin. Make sure a workpiece mounted on the table does not interfere with the workpieces and facilities around the table.
Note 2) Position after return to origin.
Note 3) The number in brackets indicates when the direction of return to origin has changed.
Note 4) If workpiece fixing bolts are too long, they can touch the guide block and cause a malfunction, etc. Use bolts that are between the maximum and minimum screw-in depths in length.

Dimensions: In-line Motor Type/D Type

LESH8D

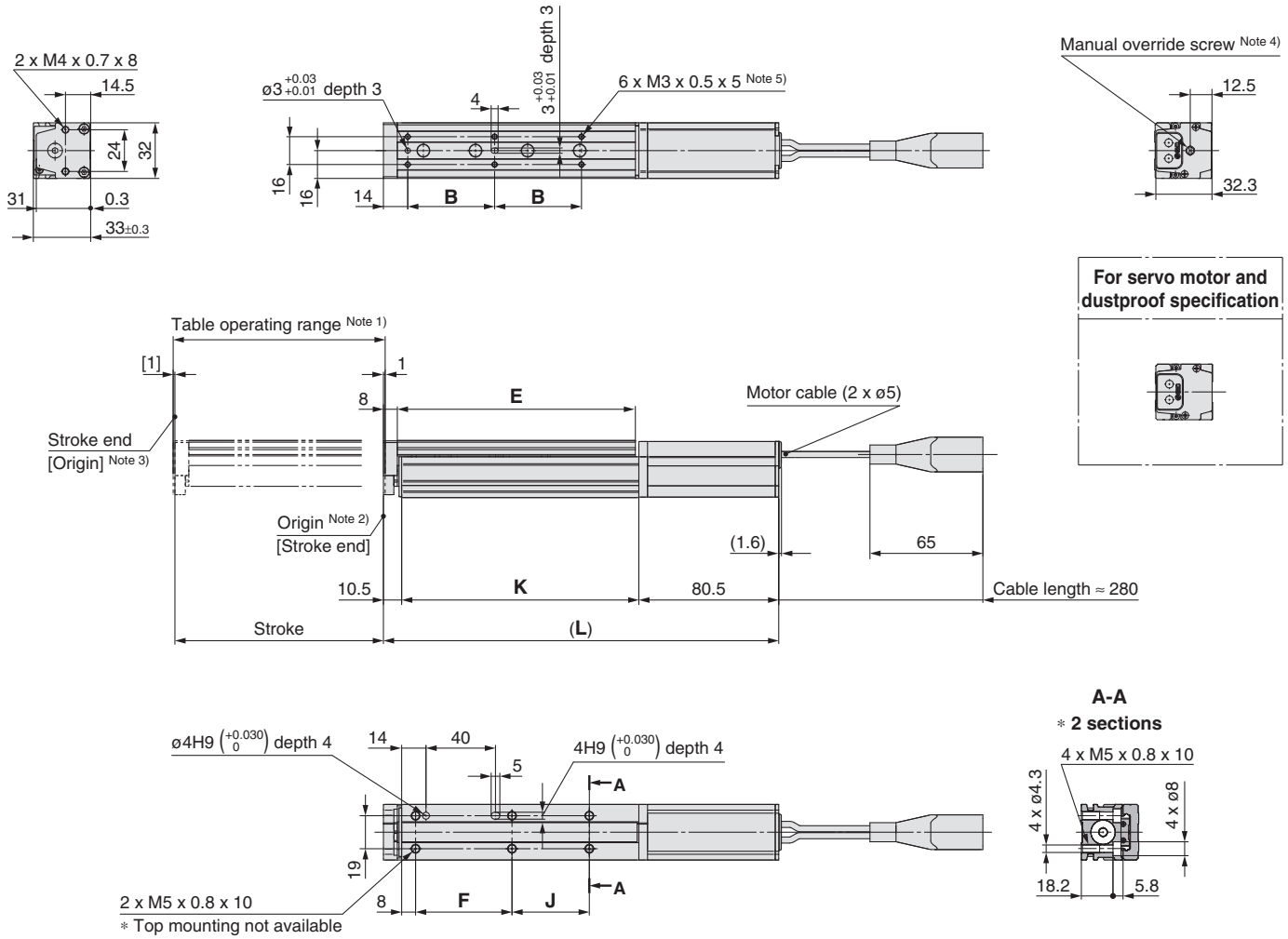

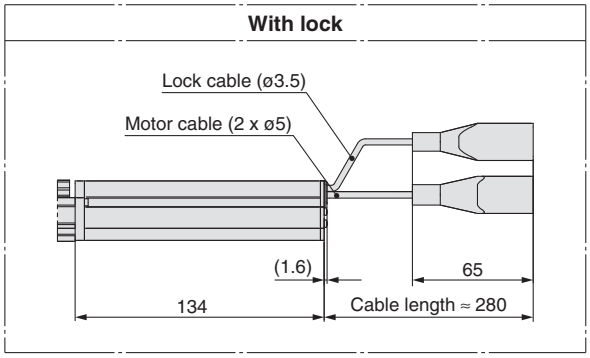

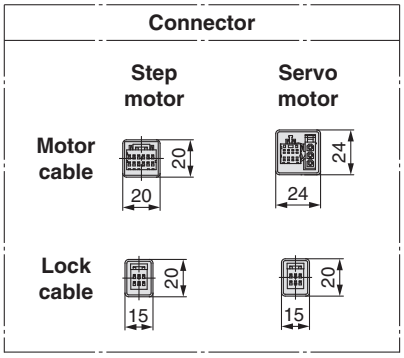

[mm]

Model	L	B	E	F	J	K
LESH8D□□-50□□-□□□□□	201.5	46	111	54.5	19.5	110.5
LESH8D□□-50B□□-□□□□□	255					
LESH8D□□-75□□-□□□□□	227.5	50	137	55.5	44.5	136.5
LESH8D□□-75B□□-□□□□□	281					

Note 1) Range within which the table can move when it returns to origin. Make sure a workpiece mounted on the table does not interfere with the workpieces and facilities around the table.
Note 2) Position after return to origin.
Note 3) The number in brackets indicates when the direction of return to origin has changed.
Note 4) The distance between the motor end cover and the manual override screw is up to 16 mm. The motor end cover hole size is ø5.5.
Note 5) If workpiece fixing bolts are too long, they can touch the guide block and cause a malfunction, etc. Use bolts that are between the maximum and minimum screw-in depths in length.

Dimensions: In-line Motor Type/D Type

LESH16D

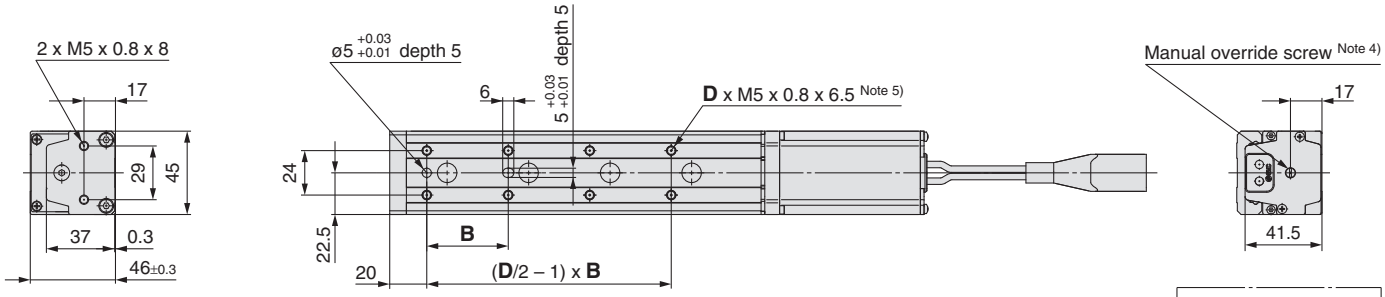

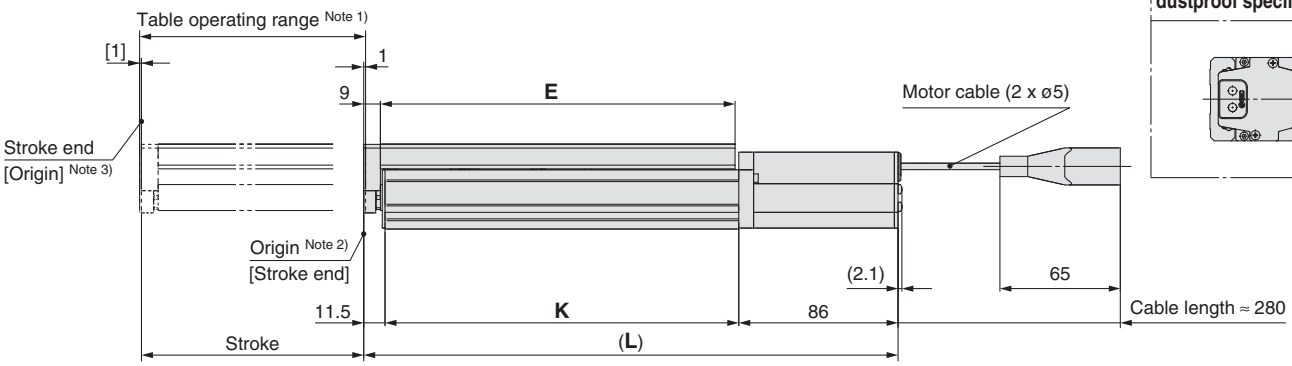

For servo motor and dustproof specification

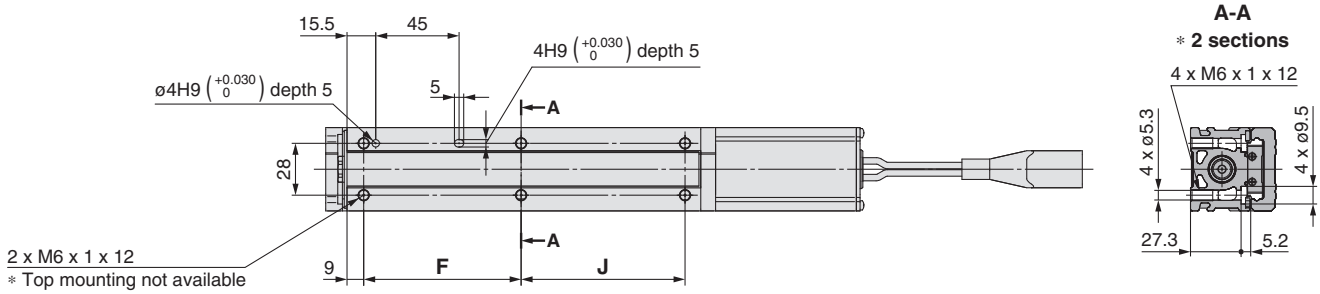

With lock

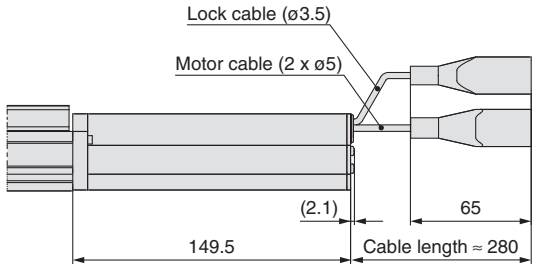

Connector

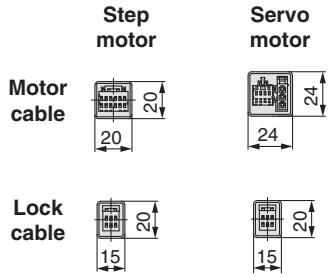

[mm]

Model	L	B	D	E	F	J	K
LESH16D□□-50□□-□□□□□	219.5	40	6	116.5	65	39.5	122
LESH16D□□-50B□□-□□□□□	283						
LESH16D□□-100□□-□□□□□	288.5	44	8	191.5	85	88.5	191
LESH16D□□-100B□□-□□□□□	352						

Note 1) Range within which the table can move when it returns to origin. Make sure a workpiece mounted on the table does not interfere with the workpieces and facilities around the table.
Note 2) Position after return to origin.
Note 3) The number in brackets indicates when the direction of return to origin has changed.
Note 4) The distance between the motor end cover and the manual override screw is up to 17 mm. The motor end cover hole size is ø5.5.
Note 5) If workpiece fixing bolts are too long, they can touch the guide block and cause a malfunction, etc. Use bolts that are between the maximum and minimum screw-in depths in length.

Dimensions: In-line Motor Type/D Type

LESH25D

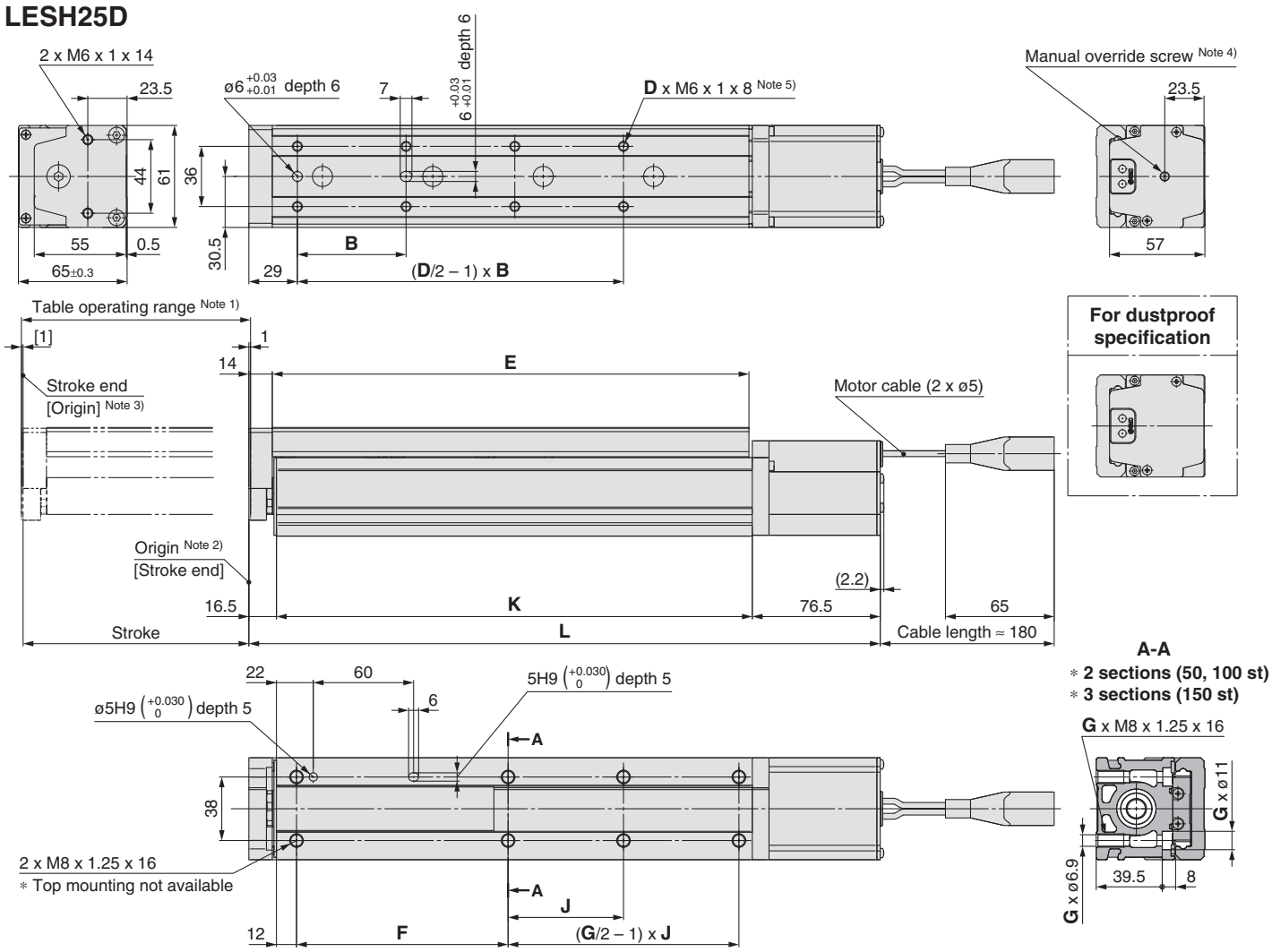

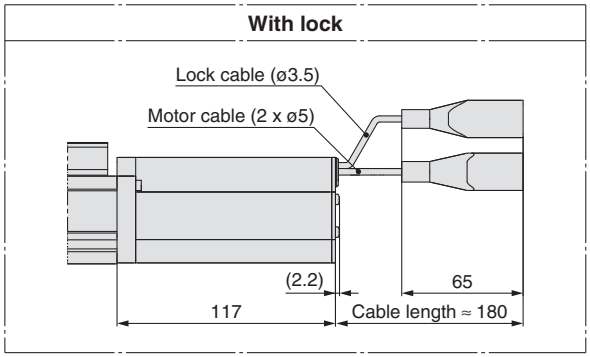

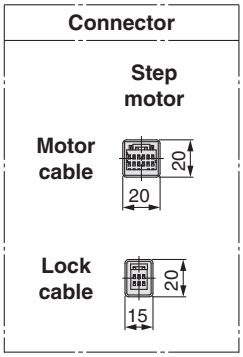

[mm]

Model	L	B	D	E	F	G	J	K
LESH25D□-50□□-□□□□□	237.5	75	4	143	84	4	40.5	144.5
LESH25D□-50B□□-□□□□□	278							
LESH25D□-100□□-□□□□□	299.5	48	8	207	98.5		88	206.5
LESH25D□-100B□□-□□□□□	340							
LESH25D□-150□□-□□□□□	377.5	65		285	126.5	6	69	284.5
LESH25D□-150B□□-□□□□□	418							

Note 1) Range within which the table can move when it returns to origin. Make sure a workpiece mounted on the table does not interfere with the workpieces and facilities around the table.
Note 2) Position after return to origin.
Note 3) The number in brackets indicates when the direction of return to origin has changed.
Note 4) The distance between the motor end cover and the manual override screw is up to 4 mm. The motor end cover hole size is ø5.5.
Note 5) If workpiece fixing bolts are too long, they can touch the guide block and cause a malfunction, etc. Use bolts that are between the maximum and minimum screw-in depths in length.

Side Holder (In-line Motor Type/D Type)

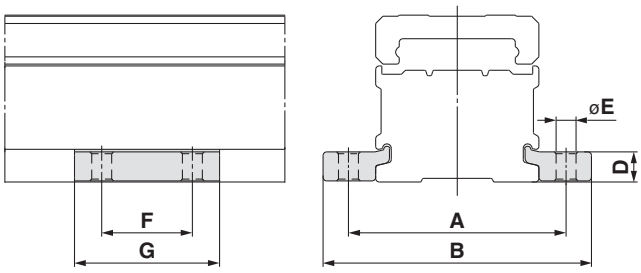

[mm]

Part no. Note)	A	B	D	E	F	G	Applicable model
LE-D-3-1	45	57.6	6.7	4.5	20	33	**LESH8D**
LE-D-3-2	60	74	8.3	5.5	25	40	**LESH16D**
LE-D-3-3	81	99	12	6.6	30	49	**LESH25D**

Note) Model numbers for 1 side holder.

Electric Slide Tables/ Specific Product Precautions 1

Be sure to read before handling. Refer to back cover for Safety Instructions and the Operation Manual for Electric Actuator Precautions.
Please download it via our website, http://www.smcworld.com

Design

⚠Caution

1. Do not apply a load in excess of the operating limit.

Select a suitable actuator by load and allowable moment. If the product is used outside of the operating limit, the eccentric load applied to the guide will be excessive and have adverse effects such as creating play on the guide, degrading accuracy and shortening the life of the product.

2. Do not use the product in applications where excessive external force or impact force is applied to it.

This can cause failure.

Handling

⚠Caution

1. INP output signal

1) Positioning operation
When the product comes within the set range by step data [In position], the INP output signal will turn on.
Initial value: Set to [0.50] or higher.

2) Pushing operation
When the effective force exceeds step data [Trigger LV], the INP output signal will turn on. Use the product within the specified range of [Pushing force] and [Trigger LV].
To ensure that the actuator pushes the workpiece with the set [Pushing force], it is recommended that the [Trigger LV] be set to the same value as the [Pushing force].

2. When the pushing operation is used, be sure to set to [Pushing operation]. Never hit at the stroke end except during return to origin.

It may damage and malfunction. The internal stopper can be broken by collision with the stroke end.

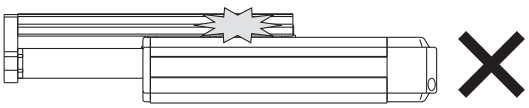

3. Use the product with the following moving force.

- Step motor (Servo/24 VDC): 100%
- Servo motor (24 VDC) : 250%

If the moving force is set below the above values, it may cause an alarm.

4. The actual speed of this actuator is affected by the load.

Check the model selection section of the catalog.

5. Do not apply a load, impact or resistance in addition to the transferred load during return to origin.

Otherwise, the origin can be displaced since it is based on detected motor torque.

Handling

⚠Caution

6. The table and guide block are made of special stainless steel. There can be rust on the product in an environment exposed to water drops.

7. Do not dent, scratch or cause other damage to the body, table and end plate mounting surfaces.

This may cause unevenness in the mounting surface, play in the guide or an increase in the sliding resistance.

8. Do not dent, scratch or cause other damage to the surface over which the rail and guide will move.

This may cause play or an increase in the sliding resistance.

9. When attaching a workpiece, do not apply strong impact or large moment.

If an external force over the allowable moment is applied, it may cause play in the guide or an increase in the sliding resistance.

10. Keep the flatness of mounting surface 0.02 mm or less.

Unevenness of a workpiece or base mounted on the body of the product may cause play on the guide and increased sliding resistance. Do not deform the mounting surface by mounting with workpieces tucked in.

11. Do not drive the main body with the table fixed.

12. When mounting the product, for R/L type fixed cable, keep the following dimension or more for bends in the cable. For D type, keep a 40 mm or longer diameter for bends in the cable.

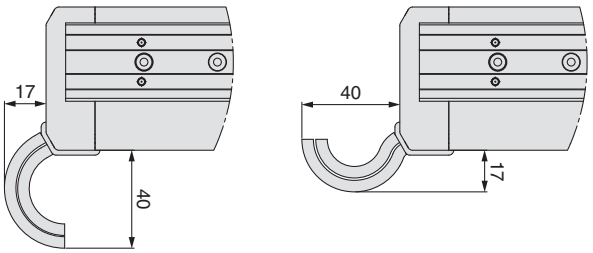

Electric Slide Tables/ Specific Product Precautions 2

Be sure to read before handling. Refer to back cover for Safety Instructions and the Operation Manual for Electric Actuator Precautions.
Please download it via our website, http://www.smcworld.com

Handling

⚠ Caution

13. When mounting the product, use screws with adequate length and tighten them to the maximum torque or less.

Tightening the screws with a higher torque than recommended may cause a malfunction, whilst the tightening with a lower torque can cause the displacement of the mounting position or in extreme conditions the actuator could become detached from its mounting position.

Body fixed/ Side mounting (Body tapped)

Model	Bolt	Max. tightening torque (N·m)	L (Max. screw-in depth mm)
LES□8R/L	M4 x 0.7	1.5	8
LES□8D	M5 x 0.8	3	10
LES16R/L			
LES16D	M6 x 1	5.2	12
LESH16□			
LES25R/L			
LES25D	M8 x 1.25	10	16
LESH25□			

Body fixed/ Side mounting (Through-hole)

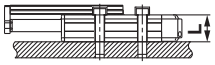

Model	Bolt	Max. tightening torque (N·m)	L (mm)
LES8R/L	M3 x 0.5	0.63	23.5
LESH8R/L			25.5
LES□8D	M4 x 0.7	1.5	18.2
LES16R/L			33.5
LES16D	M5 x 0.8	3	25.2
LESH16R/L			35.5
LESH16D			27.3
LES25R/L			49
LES25D	M6 x 1	5.2	39.8
LESH25R/L			50.5
LESH25D			39.5

Workpiece fixed/ Front mounting

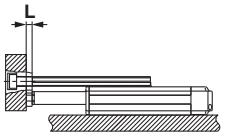

Model	Bolt	Max. tightening torque (N·m)	L (mm)
LES8R/L	M3 x 0.5	0.63	6
LESH8R/L			5.5
LES□8D	M4 x 0.7	1.5	8
LES16R/L			
LES16D	M5 x 0.8	3	
LESH16□			
LES25R/L	M6 x 1	5.2	12
LESH25R/L			10
LES□25D			14

To prevent the workpiece fixing bolts from penetrating the end plate, use bolts that are 0.5 mm or shorter than the maximum screw-in depth. If long bolts are used, they can touch the end plate and cause a malfunction, etc.

Workpiece fixed/ Top mounting

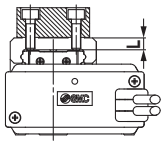

Model	Bolt	Max. tightening torque (N·m)	L (Min. to Max. screw-in depth mm)
LES8□	M3 x 0.5	0.63	2.1 to 4.1
LESH8□			5 (Max.)
LES16□	M4 x 0.7	1.5	2.7 to 5.7
LESH16□	M5 x 0.8	3	6.5 (Max.)
LES25□			3.3 to 7.3
LESH25□	M6 x 1	5.2	8 (Max.)

To prevent the workpiece fixing bolts from touching the guide block, use bolts that are 0.5 mm or shorter than the maximum screw-in depth. If long bolts are used, they can touch the guide block and cause a malfunction, etc.

Body fixed/Side mounting (Side holder)

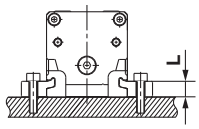

Model	Bolt	Max. tightening torque (N·m)	L (mm)
LESH8D	M4 x 0.7	1.5	6.7
LESH16D	M5 x 0.8	3	8.3
LESH25D	M6 x 1	5.2	12

When using the side holders to install the actuator, be sure to use the positioning pin. It can be displaced when vibration or excessive external force is applied.

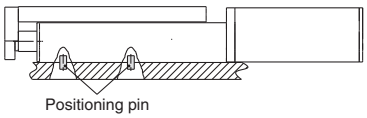

14. In pushing operation, set the product to a position of at least 0.5 mm away from a workpiece. (This position is referred to as a pushing start position.)

If the product is set to the same position as a workpiece, the following alarms may be generated and operation may become unstable.

a. "Posn failed" alarm is generated.

The product cannot reach a pushing start position due to variation in the width of workpieces.

b. "Pushing ALM" alarm is generated.

The product is pushed back from a pushing start position after starting to push.

15. When external force is applied to the table, it is necessary to reduce the work load for the sizing.

When a cable duct or flexible moving tube is attached to the actuator, the sliding resistance of the table increases and may lead to operational failure of the product.

16. When using the side holders to install the actuator, use within the dimension range below.

Otherwise, installation balance will deteriorate and cause loosening.

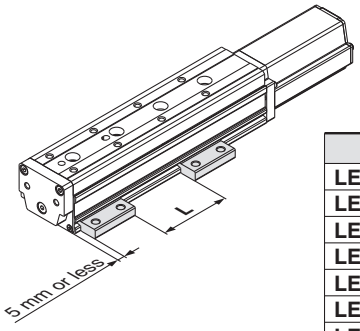

Model	L (mm)
LES□8D□-30	5 to 10
LES□8D□-50	20 to 30
LES□8D□-75	50 to 60
LES□16D□-30	5 to 10
LES□16D□-50	20 to 30
LES□16D□-75	60 to 75
LES□16D□-100	85 to 100
LES□25D□-30	5 to 15
LES□25D□-50	25 to 35
LES□25D□-75	60 to 75
LES□25D□-100	70 to 100
LES□25D□-125	155 to 170
LES□25D□-150	160 to 180

17. For the LES□□D, do not grasp or peel off a masking tape on the bottom of the body.

The masking tape may peel off and foreign matter may get inside the actuator.

18. For the LES□□D, a gap will form between the motor flange and table when the table moves (marked with the arrow below). Be careful not to put hands or fingers in a gap.

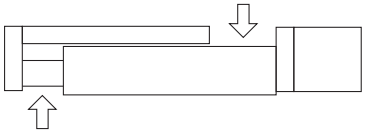

Electric Slide Tables/ Specific Product Precautions 3

Be sure to read before handling. Refer to back cover for Safety Instructions and the Operation Manual for Electric Actuator Precautions.
Please download it via our website, http://www.smcworld.com

Handling

⚠Caution

19. When mounting the body with through-holes in the mounting orientations below, make sure to use two side holders as shown in the figures.
Otherwise, installation balance will deteriorate and cause loosening.

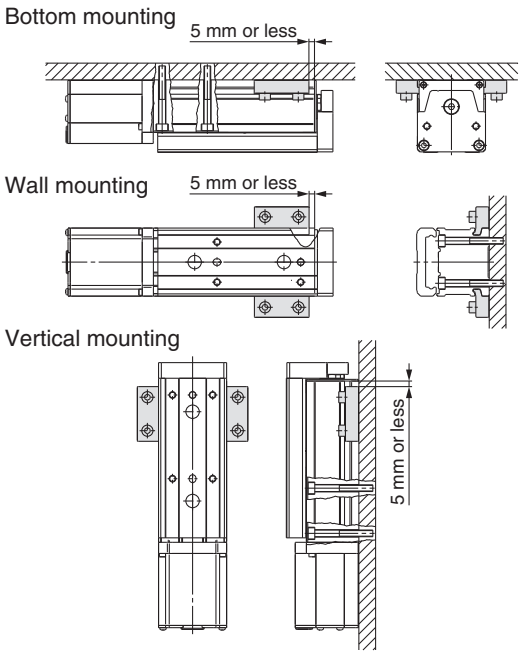

20. Install the body as shown below with the ○.
Since the product support becomes unstable, it may cause a malfunction, irregular noise and deflection.

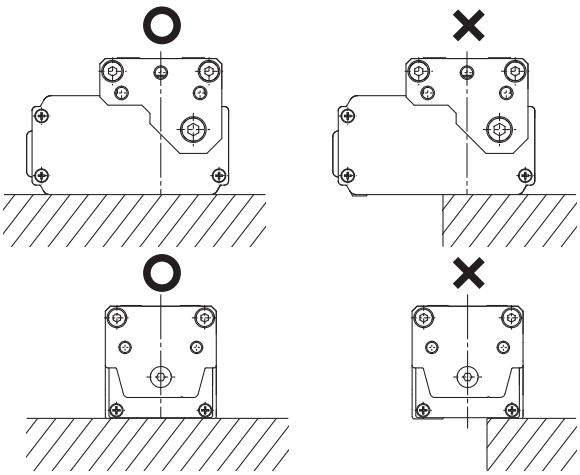

21. Even with the same product number, the table of some products can be moved by hand and the table of some products cannot be moved by hand. However, there is no abnormality with these products. (Without lock)
This difference is caused because there is a little variation with the positive efficiency (when the table is moved by the motor) and there is a large variation with the reverse-efficiency (when the table is moved manually) due to the product characteristics. There is hardly any difference among products when they are operated by the motor.

Maintenance

⚠Warning

1. Ensure that the power supply is stopped before starting maintenance work or replacement of the product.

2. For lubrication, wear protective glasses.

3. Perform maintenance according to the following requirements.

- **Maintenance frequency**

Perform maintenance according to the table below.

Frequency	Appearance check	Belt check
Inspection before daily operation	○	—
Inspection every 6 months*	—	○
Inspection every 250 km*	—	○
Inspection every 5 million cycles*	—	○

* Select whichever comes sooner.

- **Items for visual appearance check**

1. Loose set screws, Abnormal dirt
2. Check of flaw and cable joint
3. Vibration, Noise

- **Items for belt check (R/L type only)**

Stop operation immediately and replace the belt when belt appear to be below.

a. Tooth shape canvas is worn out.
Canvas fiber becomes fuzzy. Rubber is removed and the fiber becomes whitish. Lines of fibers become unclear.

b. Peeling off or wearing of the side of the belt
Belt corner becomes round and frayed thread sticks out.

c. Belt partially cut
Belt is partially cut. Foreign matter caught in teeth other than cut part causes flaw.

d. Vertical line of belt teeth
Flaw which is made when the belt runs on the flange.

e. Rubber back of the belt is softened and sticky.

f . Crack on the back of the belt
It is recommended that the belt be replaced after being in service for 2 years, or before reaching the following distance.

Controller/Driver

Step Data Input Type ····· Page 53

Step Motor (Servo/24 VDC)

Series LECP6

Servo Motor (24 VDC)

Series LECA6

Gateway Unit ····· Page 65

Series LEC-G

Programless Type ····· Page 68

Pulse Input Type ····· Page 75

Step Motor (Servo/24 VDC)

Series LECP1

Step Motor (Servo/24 VDC)

Series LECPA

Controller (Step Data Input Type)

Step Motor (Servo/24 VDC)

Series LECP6

Servo Motor (24 VDC)

Series LECA6

Series LECP6 Series LECA6

How to Order

⚠Caution

[CE-compliant products]

① EMC compliance was tested by combining the electric actuator LES/LESH series and the controller LEC series.
The EMC depends on the configuration of the customer's control panel and the relationship with other electrical equipment and wiring. Therefore conformity to the EMC directive cannot be certified for SMC components incorporated into the customer's equipment under actual operating conditions. As a result it is necessary for the customer to verify conformity to the EMC directive for the machinery and equipment as a whole.

② For the LECA6 series (servo motor controller), EMC compliance was tested by installing a noise filter set (LEC-NFA). Refer to page 61 for the noise filter set. Refer to the LECA Operation Manual for installation.

[UL-compliant products]

When conformity to UL is required, the electric actuator and controller should be used with a UL1310 Class 2 power supply.

LE C P 6 N □ □ – □

Controller

Compatible motor

P	Step motor (Servo/24 VDC)
A	Servo motor (24 VDC)

Number of step data (Points)

6	64

Parallel I/O type

N	NPN
P	PNP

I/O cable length [m]

Nil	Without cable
1	1.5
3	3
5	5

Option

Nil	Screw mounting
D Note)	DIN rail mounting

Note) DIN rail is not included. Order it separately.

Actuator part number

(Except cable specifications and actuator options)
Example: Enter "LESH8RJ-50" for the LESH8RJ-50B-R16N1.

∗ When controller equipped type is selected when ordering the LE series, you do not need to order this controller.

The controller is sold as single unit after the compatible actuator is set.

Confirm that the combination of the controller and the actuator is correct.

<Check the following before use.>

① Check the actuator label for model number. This matches the controller.

② Check Parallel I/O configuration matches (NPN or PNP).

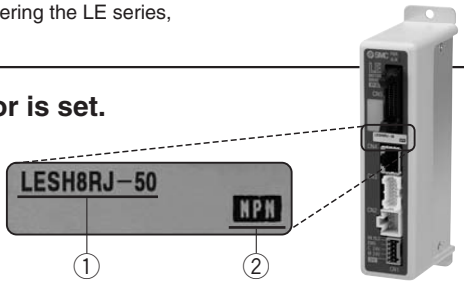

∗ Refer to the operation manual for using the products. Please download it via our website, http://www.smcworld.com

Specifications

Basic Specifications

Item	LECP6	LECA6
Compatible motor	Step motor (Servo/24 VDC)	Servo motor (24 VDC)
Power supply Note 1)	Power voltage: 24 VDC ±10% Current consumption: 3 A (Peak 5 A) Note 2) [Including motor drive power, control power, stop, lock release]	Power voltage: 24 VDC ±10% Current consumption: 3 A (Peak 10 A) Note 2) [Including motor drive power, control power, stop, lock release]
Parallel input	11 inputs (Photo-coupler isolation)	
Parallel output	13 outputs (Photo-coupler isolation)	
Compatible encoder	Incremental A/B phase (800 pulse/rotation)	Incremental A/B/Z phase (800 pulse/rotation)
Serial communication	RS485 (Modbus protocol compliant)	
Memory	EEPROM	
LED indicator	LED (Green/Red) one of each	
Lock control	Forced-lock release terminal Note 3)	
Cable length [m]	I/O cable: 5 or less, Actuator cable: 20 or less	
Cooling system	Natural air cooling	
Operating temperature range [°C]	0 to 40 (No freezing)	
Operating humidity range [%RH]	90 or less (No condensation)	
Storage temperature range [°C]	–10 to 60 (No freezing)	
Storage humidity range [%RH]	90 or less (No condensation)	
Insulation resistance [MΩ]	Between the housing and SG terminal 50 (500 VDC)	
Weight [g]	150 (Screw mounting) 170 (DIN rail mounting)	

Note 1) Do not use the power supply of "inrush current prevention type" for the controller power supply. When conformity to UL is required, the electric actuator and controller should be used with a UL1310 Class 2 power supply.

Note 2) The power consumption changes depending on the actuator model. Refer to the specifications of actuator for more details.

Note 3) Applicable to non-magnetizing lock.

How to Mount

a) Screw mounting (LEC□6□□-□)
(Installation with two M4 screws)

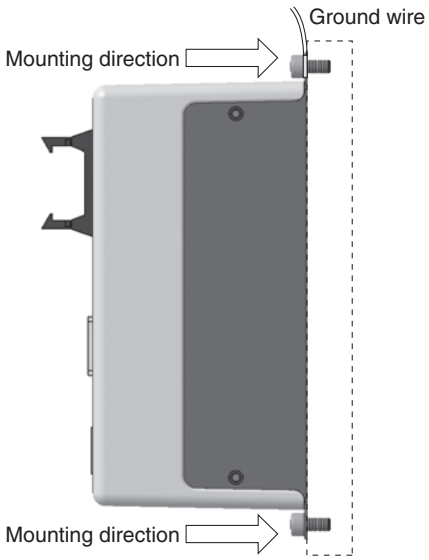

b) DIN rail mounting (LEC□6□□D-□)
(Installation with the DIN rail)

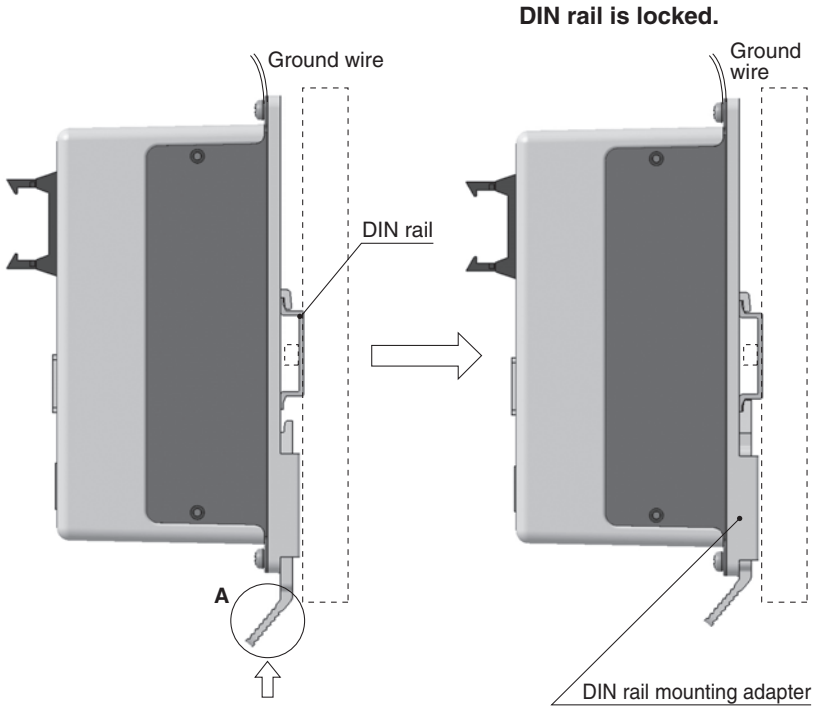

Hook the controller on the DIN rail and press the lever of section **A** in the arrow direction to lock it.

Note) When size 25 or more of the LES series are used, the space between the controllers should be 10 mm or more.

DIN rail
AXT100-DR-□

∗ For □, enter a number from the "No." line in the table below.
Refer to the dimensions on page 55 for the mounting dimensions.

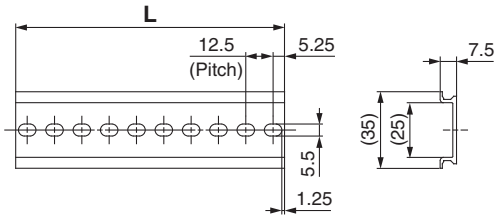

L Dimension [mm]

No.	1	2	3	4	5	6	7	8	9	10	11	12	13	14	15	16	17	18	19	20
L	23	35.5	48	60.5	73	85.5	98	110.5	123	135.5	148	160.5	173	185.5	198	210.5	223	235.5	248	260.5

No.	21	22	23	24	25	26	27	28	29	30	31	32	33	34	35	36	37	38	39	40
L	273	285.5	298	310.5	323	335.5	348	360.5	373	385.5	398	410.5	423	435.5	448	460.5	473	485.5	498	510.5

DIN rail mounting adapter
LEC-D0 (with 2 mounting screws)

This should be used when the DIN rail mounting adapter is mounted onto the screw mounting type controller afterwards.

Dimensions

a) Screw mounting (LEC□6□□-□)

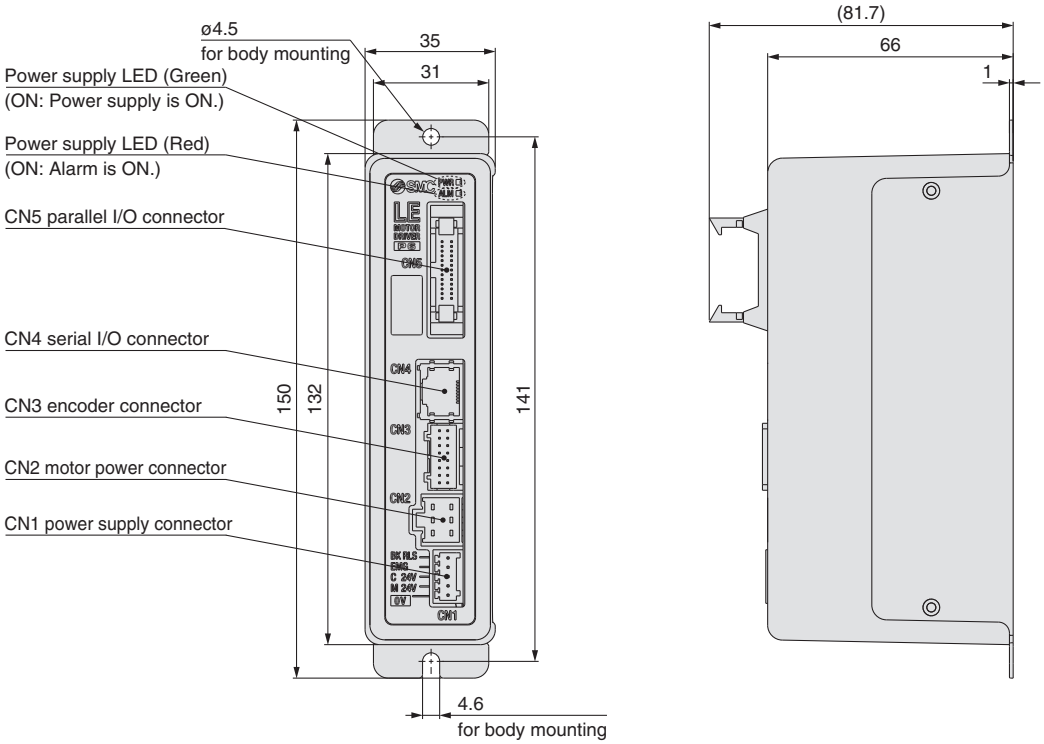

b) DIN rail mounting (LEC□6□□D-□)

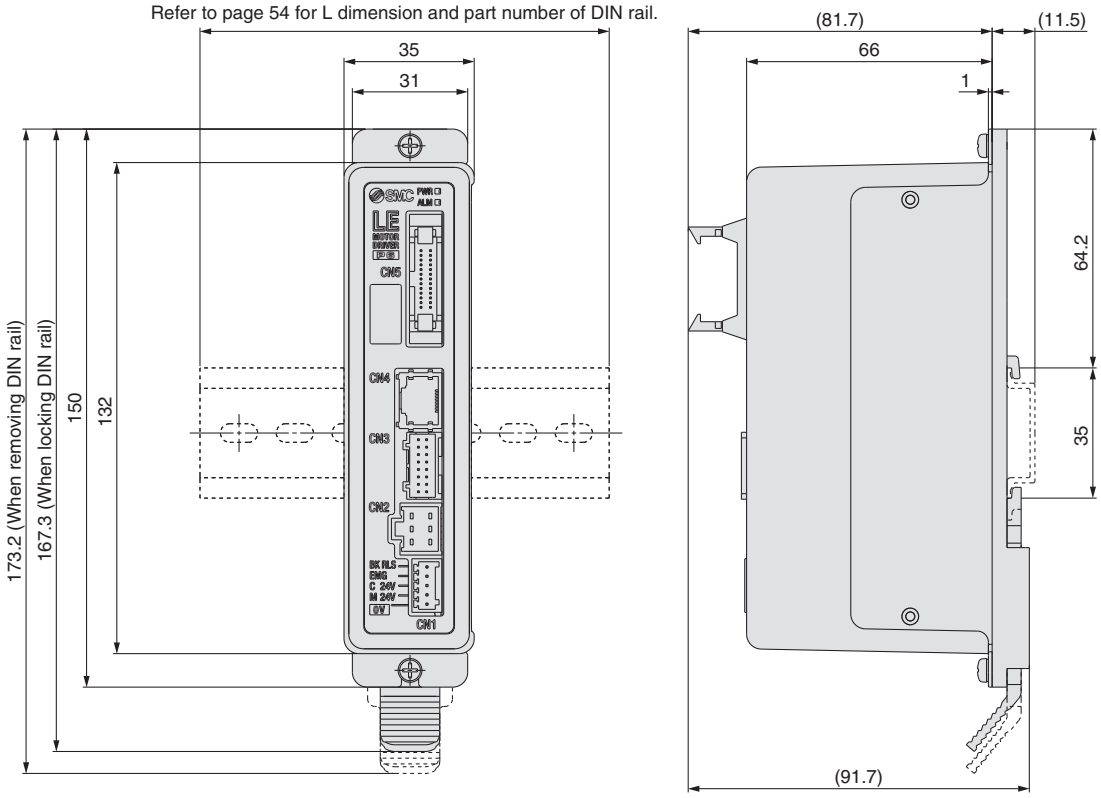

Wiring Example 1

Power Supply Connector: CN1

∗ Power supply plug is an accessory.

CN1 Power Supply Connector Terminal for LECP6 (PHOENIX CONTACT FK-MC0.5/5-ST-2.5)

Terminal name	Function	Details
0V	Common supply (–)	M24V terminal/C24V terminal/EMG terminal/BK RLS terminal are common (–).
M24V	Motor power supply (+)	Motor power supply (+) supplied to the controller
C24V	Control power supply (+)	Control power supply (+) supplied to the controller
EMG	Stop (+)	Input (+) for releasing the stop
BK RLS	Lock release (+)	Input (+) for releasing the lock

Power supply plug for LECP6

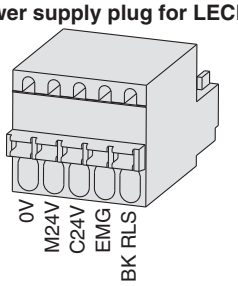

CN1 Power Supply Connector Terminal for LECA6 (PHOENIX CONTACT FK-MC0.5/7-ST-2.5)

Terminal name	Function	Details
0V	Common supply (–)	M24V terminal/C24V terminal/EMG terminal/BK RLS terminal are common (–).
M24V	Motor power supply (+)	Motor power supply (+) supplied to the controller
C24V	Control power supply (+)	Control power supply (+) supplied to the controller
EMG	Stop (+)	Input (+) for releasing the stop
BK RLS	Lock release (+)	Input (+) for releasing the lock
RG+	Regenerative output 1	Regenerative output terminals for external connection (Not necessary to connect them in the combination with the LE series standard specifications.)
RG–	Regenerative output 2	

Power supply plug for LECA6

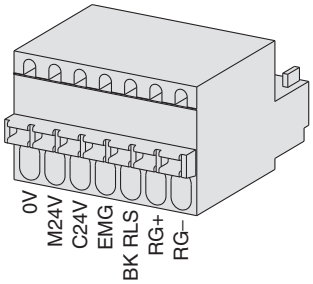

Wiring Example 2

Parallel I/O Connector: CN5

∗ When you connect a PLC, etc., to the CN5 parallel I/O connector, please use the I/O cable (LEC-CN5-□).
∗ The wiring should be changed depending on the type of the parallel I/O (NPN or PNP).

Wiring diagram

LEC□6N□□-□ (NPN)

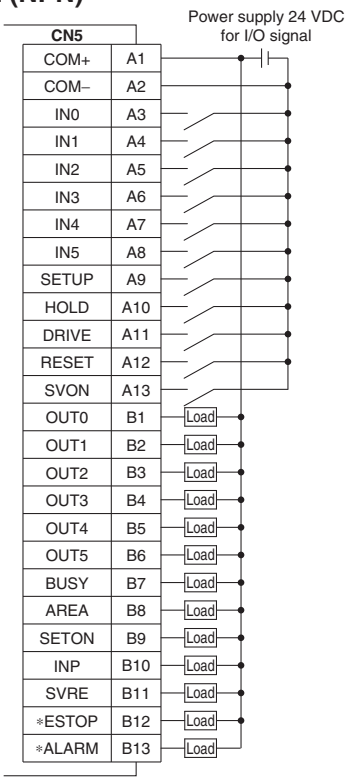

LEC□6P□□-□ (PNP)

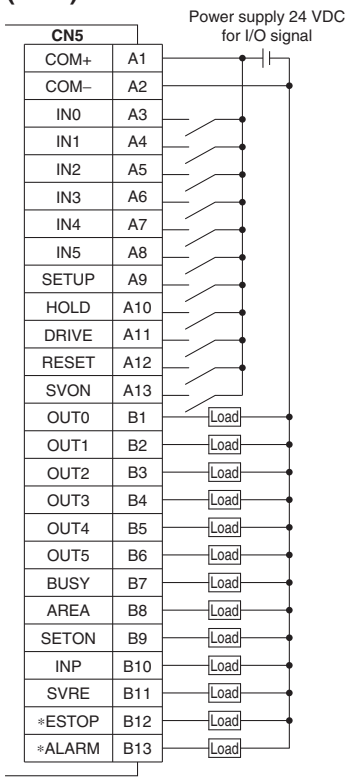

Input Signal

Name	Details
COM+	Connects the power supply 24 V for input/output signal
COM–	Connects the power supply 0 V for input/output signal
IN0 to IN5	Step data specified Bit No. (Input is instructed in the combination of IN0 to 5.)
SETUP	Instruction to return to origin
HOLD	Operation is temporarily stopped
DRIVE	Instruction to drive
RESET	Alarm reset and operation interruption
SVON	Servo ON instruction

Output Signal

Name	Details
OUT0 to OUT5	Outputs the step data no. during operation
BUSY	Outputs when the actuator is moving
AREA	Outputs within the step data area output setting range
SETON	Outputs when returning to origin
INP	Outputs when target position or target force is reached (Turns on when the positioning or pushing is completed.)
SVRE	Outputs when servo is on
∗ESTOP Note)	Not output when EMG stop is instructed
∗ALARM Note)	Not output when alarm is generated

Note) Signal of negative-logic circuit (N.C.)

Step Data Setting

1. Step data setting for positioning

In this setting, the actuator moves toward and stops at the target position.
The following diagram shows the setting items and operation.
The setting items and set values for this operation are stated below.

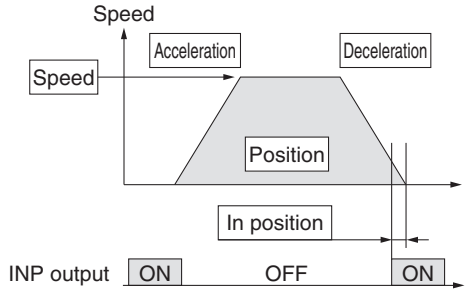

◎: Need to be set.
○: Need to be adjusted as required.
—: Setting is not required.

Step Data (Positioning)

Necessity	Item	Details
◎	Movement MOD	When the absolute position is required, set Absolute. When the relative position is required, set Relative.
◎	Speed	Transfer speed to the target position
◎	Position	Target position
○	Acceleration	Parameter which defines how rapidly the actuator reaches the speed set. The higher the set value, the faster it reaches the speed set.
○	Deceleration	Parameter which defines how rapidly the actuator comes to stop. The higher the set value, the quicker it stops.
◎	Pushing force	Set 0. (If values 1 to 100 are set, the operation will be changed to the pushing operation.)
—	Trigger LV	Setting is not required.
—	Pushing speed	Setting is not required.
○	Moving force	Max. torque during the positioning operation (No specific change is required.)
○	Area 1, Area 2	Condition that turns on the AREA output signal.
○	In position	Condition that turns on the INP output signal. When the actuator enters the range of [in position], the INP output signal turns on. (It is unnecessary to change this from the initial value.) When it is necessary to output the arrival signal before the operation is completed, make the value larger.

2. Step data setting for pushing

The actuator moves toward the pushing start position, and when it reaches that position, it starts pushing with the set force or less.
The following diagram shows the setting items and operation.
The setting items and set values for this operation are stated below.

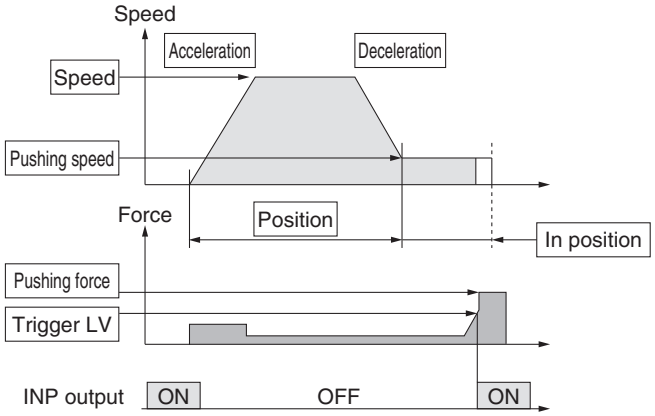

◎: Need to be set.
○: Need to be adjusted as required.

Step Data (Pushing)

Necessity	Item	Details
◎	Movement MOD	When the absolute position is required, set Absolute. When the relative position is required, set Relative.
◎	Speed	Transfer speed to the pushing start position
◎	Position	Pushing start position
○	Acceleration	Parameter which defines how rapidly the actuator reaches the speed set. The higher the set value, the faster it reaches the speed set.
○	Deceleration	Parameter which defines how rapidly the actuator comes to stop. The higher the set value, the quicker it stops.
◎	Pushing force	Pushing force ratio is defined. The setting range differs depending on the electric actuator type. Refer to the operation manual for the electric actuator.
◎	Trigger LV	Condition that turns on the INP output signal. The INP output signal turns on when the generated force exceeds the value. Trigger level should be the pushing force or less.
○	Pushing speed	Pushing speed during pushing. When the speed is set fast, the electric actuator and workpieces might be damaged due to the impact when they hit the end, so this set value should be smaller. Refer to the operation manual for the electric actuator.
○	Moving force	Max. torque during the positioning operation (No specific change is required.)
○	Area 1, Area 2	Condition that turns on the AREA output signal.
◎	In position	Transfer distance during pushing. If the transferred distance exceeds the setting, it stops even if it is not pushing. If the transfer distance is exceeded, the INP output signal will not turn on.

Signal Timing

Return to Origin

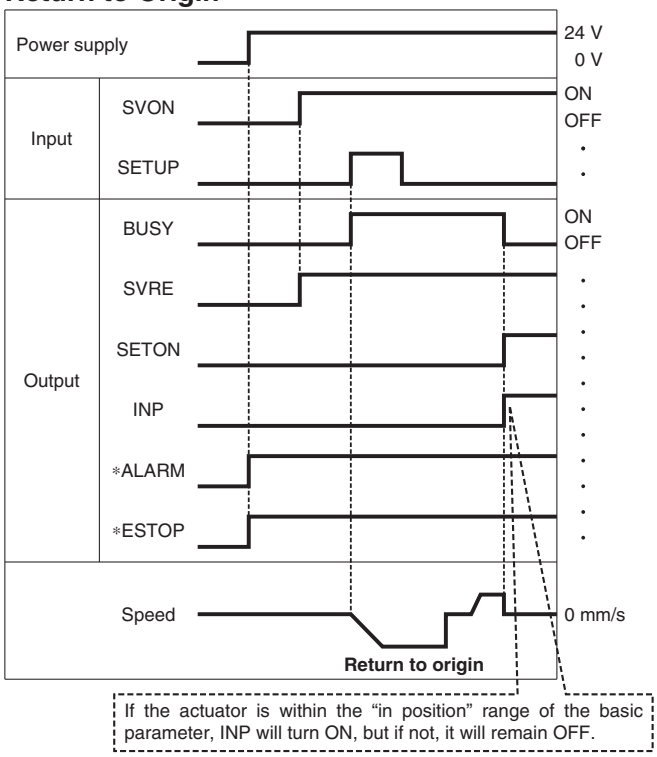

∗ "∗ALARM" and "∗ESTOP" are expressed as negative-logic circuit.

Positioning Operation

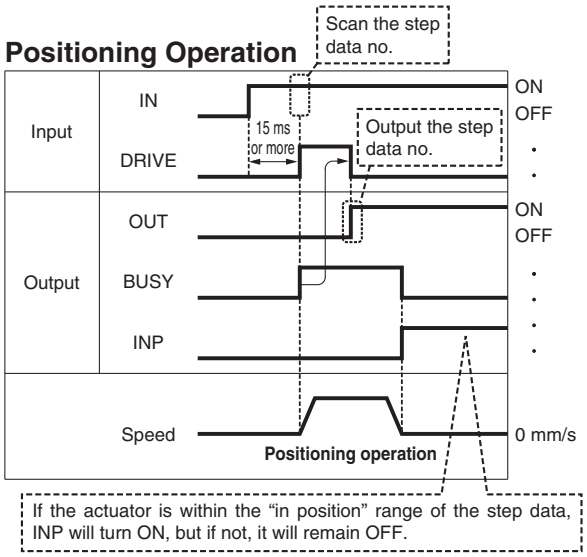

∗ "OUT" is output when "DRIVE" is changed from ON to OFF.
(When power supply is applied, "DRIVE" or "RESET" is turned ON or "∗ESTOP" is turned OFF, all of the "OUT" outputs are OFF.)

Pushing Operation

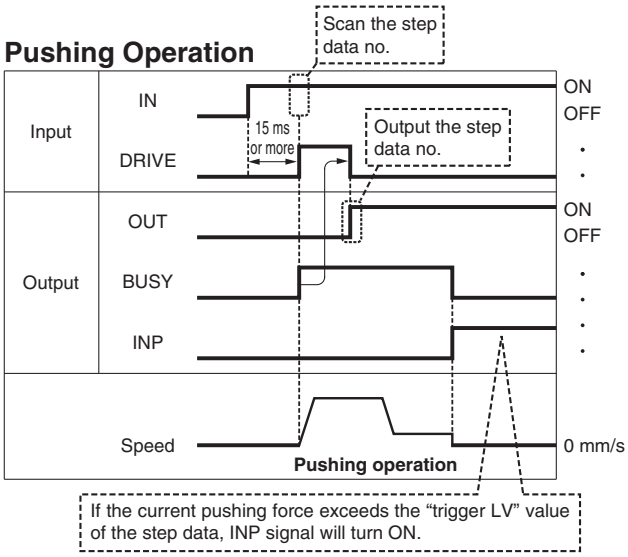

HOLD

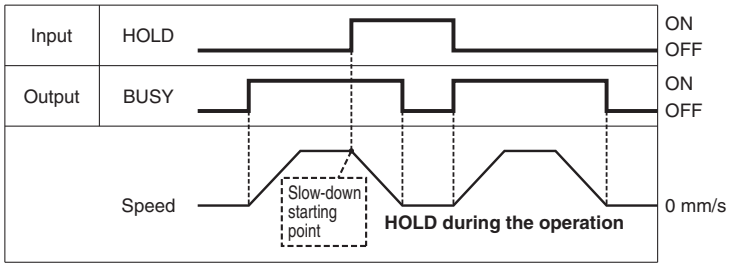

∗ When the actuator is in the positioning range in the pushing operation, it does not stop even if HOLD signal is input.

Reset

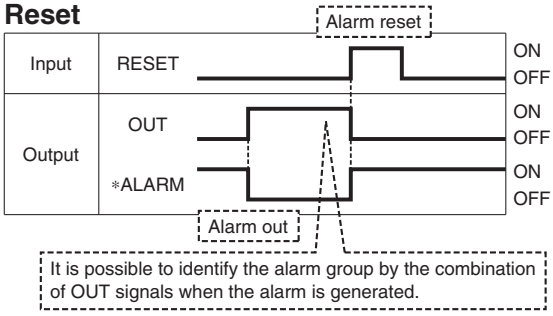

∗ "∗ALARM" is expressed as negative-logic circuit.

Options: Actuator Cable

[Robotic cable, standard cable for step motor (Servo/24 VDC)]

LE – CP – 1 – ☐

Cable length (L) [m]

1	1.5
3	3
5	5
8	8*
A	10*
B	15*
C	20*

∗ Produced upon receipt of order (Robotic cable only)

Cable type

Nil	Robotic cable (Flexible cable)
S	Standard cable

LE-CP-1/3/5/Cable length: 1.5 m, 3 m, 5 m

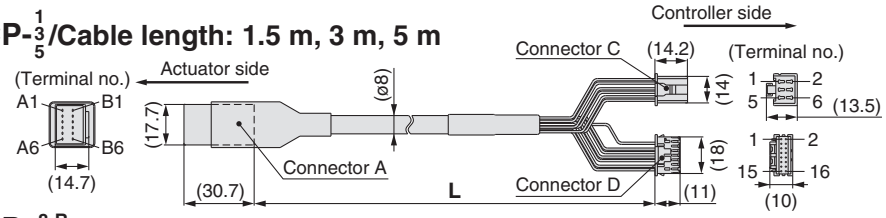

LE-CP-8/A/B/C/Cable length: 8 m, 10 m, 15 m, 20 m
(∗ Produced upon receipt of order)

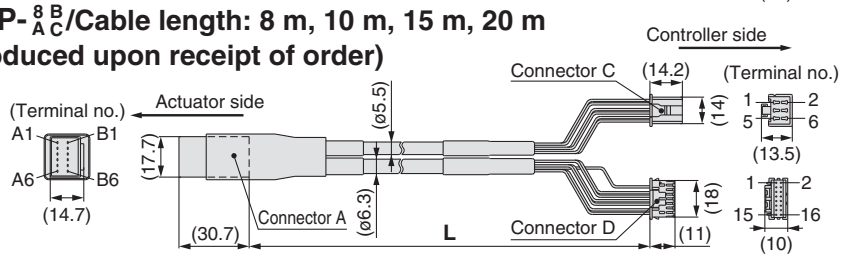

Signal	Connector A terminal no.	Cable color	Connector C terminal no.
A	B-1	Brown	2
$\overline{A}$	A-1	Red	1
B	B-2	Orange	6
$\overline{B}$	A-2	Yellow	5
COM-A/COM	B-3	Green	3
COM-B/—	A-3	Blue	4

Shield

		Cable color	Connector D terminal no.
Vcc	B-4	Brown	12
GND	A-4	Black	13
$\overline{A}$	B-5	Red	7
A	A-5	Black	6
$\overline{B}$	B-6	Orange	9
B	A-6	Black	8
		—	3

[Robotic cable, standard cable with lock and sensor for step motor (Servo/24 VDC)]

LE – CP – 1 – B – ☐

Cable length (L) [m]

1	1.5
3	3
5	5
8	8*
A	10*
B	15*
C	20*

∗ Produced upon receipt of order (Robotic cable only)

With lock and sensor

Cable type

Nil	Robotic cable (Flexible cable)
S	Standard cable

LE-CP-1/3/5/Cable length: 1.5 m, 3 m, 5 m

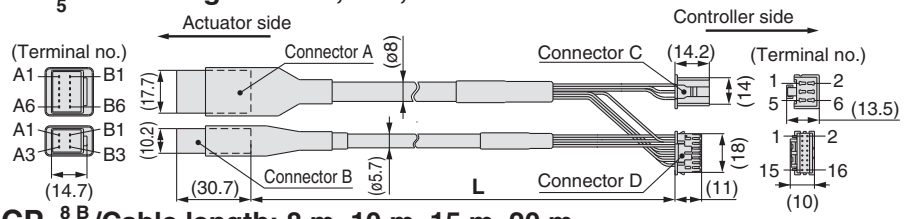

LE-CP-8/A/B/C/Cable length: 8 m, 10 m, 15 m, 20 m
(∗ Produced upon receipt of order)

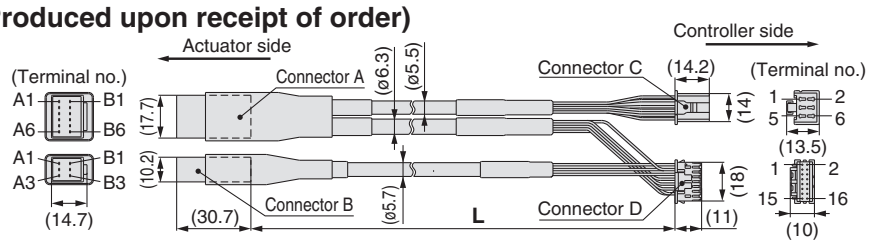

Signal	Connector A terminal no.	Cable color	Connector C terminal no.
A	B-1	Brown	2
$\overline{A}$	A-1	Red	1
B	B-2	Orange	6
$\overline{B}$	A-2	Yellow	5
COM-A/COM	B-3	Green	3
COM-B/—	A-3	Blue	4

Shield

		Cable color	Connector D terminal no.
Vcc	B-4	Brown	12
GND	A-4	Black	13
$\overline{A}$	B-5	Red	7
A	A-5	Black	6
$\overline{B}$	B-6	Orange	9
B	A-6	Black	8
		—	3

Signal	Connector B terminal no.		
Lock (+)	B-1	Red	4
Lock (–)	A-1	Black	5
Sensor (+) Note)	B-3	Brown	1
Sensor (–) Note)	A-3	Blue	2

Note) Not used for the LE series.

[Robotic cable for servo motor (24 VDC)]

LE – CA – 1

Cable length (L) [m]

1	1.5
3	3
5	5
8	8*
A	10*
B	15*
C	20*

* Produced upon receipt of order

LE-CA-□

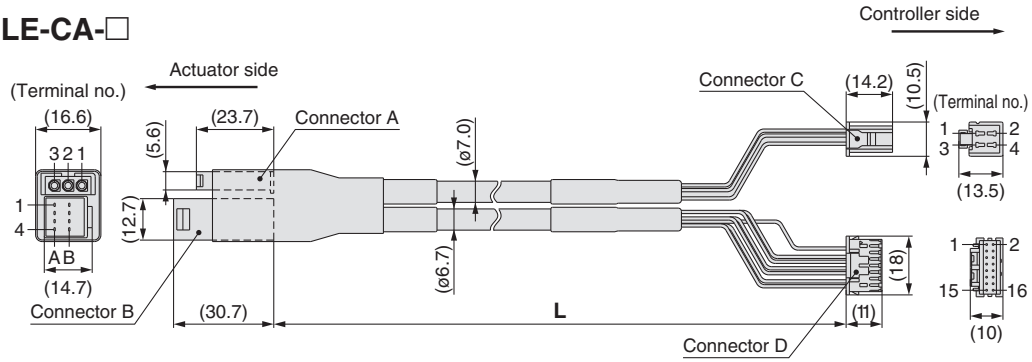

Signal	Connector A terminal no.	Cable color	Connector C terminal no.
U	1	Red	1
V	2	White	2
W	3	Black	3

Signal	Connector B terminal no.	Cable color	Connector D terminal no.
Vcc	B-1	Brown	12
GND	A-1	Black	13
$\overline{A}$	B-2	Red	7
A	A-2	Black	6
$\overline{B}$	B-3	Orange	9
B	A-3	Black	8
$\overline{Z}$	B-4	Yellow	11
Z	A-4	Black	10
		—	3

Shield

Connection of shield material

[Robotic cable with lock and sensor for servo motor (24 VDC)]

LE – CA – 1 – B

Cable length (L) [m]

1	1.5
3	3
5	5
8	8*
A	10*
B	15*
C	20*

* Produced upon receipt of order

With lock and sensor

LE-CA-□-B

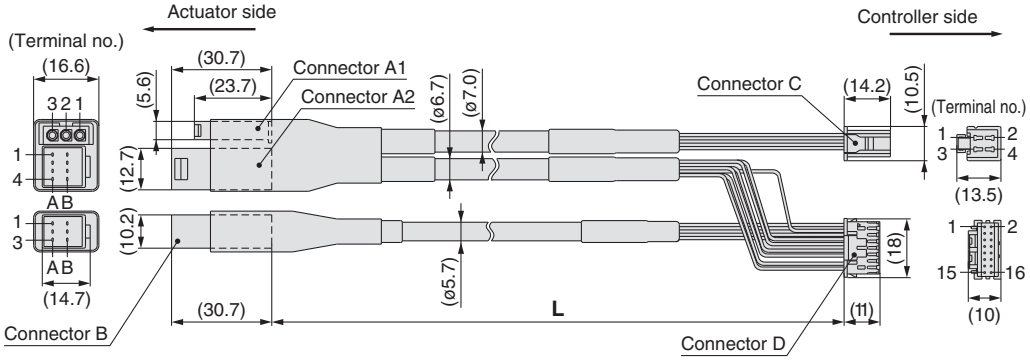

Signal	Connector A1 terminal no.	Cable color	Connector C terminal no.
U	1	Red	1
V	2	White	2
W	3	Black	3

Signal	Connector A2 terminal no.	Cable color	Connector D terminal no.
Vcc	B-1	Brown	12
GND	A-1	Black	13
$\overline{A}$	B-2	Red	7
A	A-2	Black	6
$\overline{B}$	B-3	Orange	9
B	A-3	Black	8
$\overline{Z}$	B-4	Yellow	11
Z	A-4	Black	10
		—	3

Shield

Connection of shield material

Signal	Connector B terminal no.	Cable color	Connector D terminal no.
Lock (+)	B-1	Red	4
Lock (–)	A-1	Black	5
Sensor (+) Note)	B-3	Brown	1
Sensor (–) Note)	A-3	Black	2

Note) Not used for the LE series.

Option: I/O Cable

LEC－CN5－1

Cable length (L) [m]

1	1.5
3	3
5	5

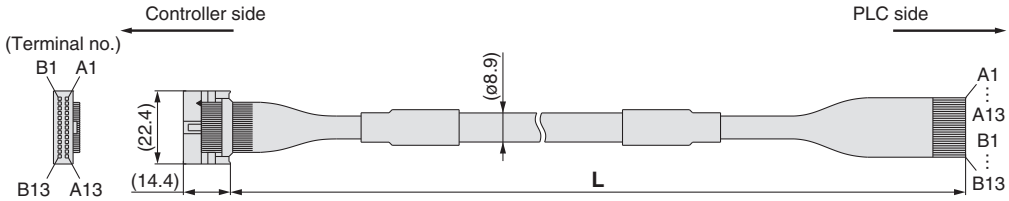

∗ Conductor size: AWG28

Connector pin no.	Insulation color	Dot mark	Dot color
A1	Light brown	■	Black
A2	Light brown	■	Red
A3	Yellow	■	Black
A4	Yellow	■	Red
A5	Light green	■	Black
A6	Light green	■	Red
A7	Gray	■	Black
A8	Gray	■	Red
A9	White	■	Black
A10	White	■	Red
A11	Light brown	■ ■	Black
A12	Light brown	■ ■	Red
A13	Yellow	■ ■	Black

Connector pin no.	Insulation color	Dot mark	Dot color
B1	Yellow	■ ■	Red
B2	Light green	■ ■	Black
B3	Light green	■ ■	Red
B4	Gray	■ ■	Black
B5	Gray	■ ■	Red
B6	White	■ ■	Black
B7	White	■ ■	Red
B8	Light brown	■ ■ ■	Black
B9	Light brown	■ ■ ■	Red
B10	Yellow	■ ■ ■	Black
B11	Yellow	■ ■ ■	Red
B12	Light green	■ ■ ■	Black
B13	Light green	■ ■ ■	Red
—	Shield		

Option: Noise Filter Set for Servo Motor (24 VDC)

LEC－NFA

Contents of the set: 2 noise filters (Manufactured by WURTH ELEKTRONIK: 74271222)

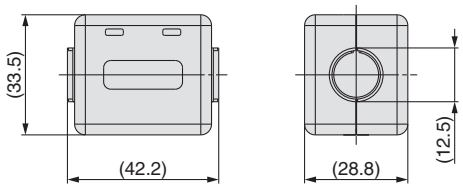

∗ Refer to the LECA6 series Operation Manual for installation.

Series LEC

Windows®XP, Windows®7 compatible

Controller Setting Kit/LEC-W2

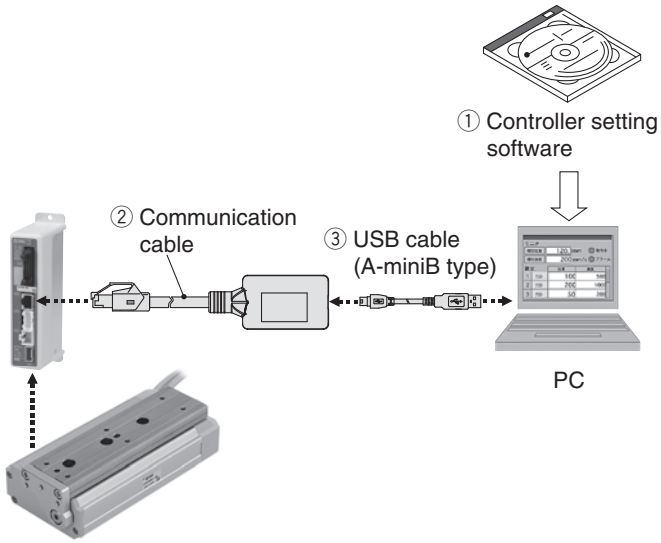

How to Order

LEC − W2

Controller setting kit
(Japanese and English are available.)

Contents

① **Controller setting software (CD-ROM)**
② **Communication cable**
③ **USB cable**
(Cable between the PC and the conversion unit)

Compatible Controllers/Driver

Step motor controller (Servo/24 VDC)	**Series LECP6**
Servo motor controller (24 VDC)	**Series LECA6**
Step motor driver (Pulse input type)	**Series LECPA**

Hardware Requirements

OS	IBM PC/AT compatible machine running Windows®XP (32-bit), Windows®7 (32-bit and 64-bit).
Communication interface	USB 1.1 or USB 2.0 ports
Display	XGA (1024 x 768) or more

∗ Windows® and Windows®7 are registered trademarks of Microsoft Corporation in the United States.
∗ Refer to SMC website for version update information, http://www.smcworld.com

Screen Example

Easy mode screen example

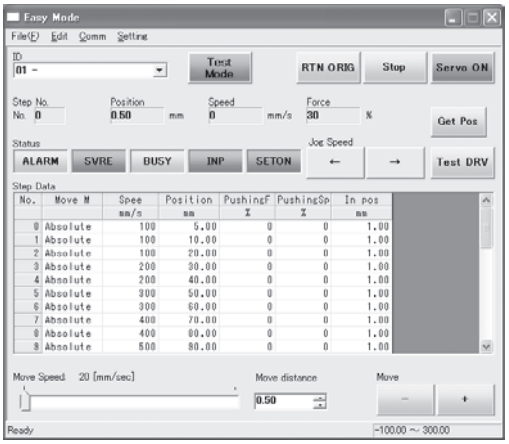

Easy operation and simple setting

- Allowing to set and display actuator step data such as position, speed, force, etc.
- Setting of step data and testing of the drive can be performed on the same page.
- Can be used to jog and move at a constant rate.

Normal mode screen example

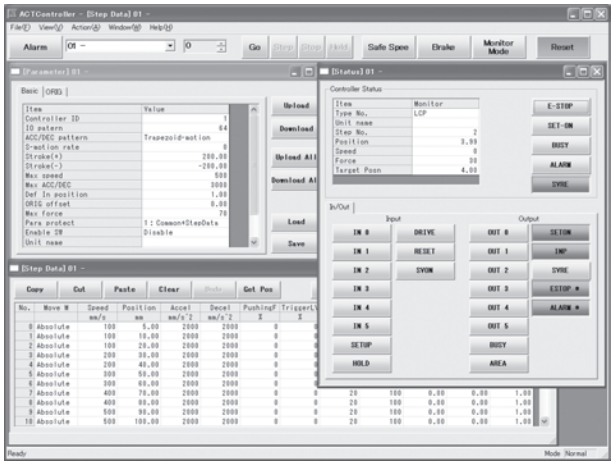

Detailed setting

- Step data can be set in detail.
- Signals and terminal status can be monitored.
- Parameters can be set.
- JOG and constant rate movement, return to origin, test operation and testing of forced output can be performed.

Series LEC
Teaching Box/LEC-T1

How to Order

LEC-T1-3JG

Teaching box

Cable length [m]

3	3

Initial language

J	Japanese
E	English

∗ The displayed language can be changed to English or Japanese.

Stop switch

G	Equipped with stop switch

Enable switch

Nil	None
S	Equipped with enable switch

∗ Interlock switch for jog and test function

Specifications

Item	Description
Switch	Stop switch, Enable switch (Option)
Cable length [m]	3
Enclosure	IP64 (Except connector)
Operating temperature range [°C]	5 to 50
Operating humidity range [%RH]	90 or less (No condensation)
Weight [g]	350 (Except cable)

[CE-compliant products]
The EMC compliance of the teaching box was tested with the LECP6 series step motor controller (servo/24 VDC) and an applicable actuator.
[UL-compliant products]
When conformity to UL is required, the electric actuator and controller should be used with a UL1310 Class 2 power supply.

Standard functions
- **Chinese character display**
- **Stop switch is provided.**

Option
- **Enable switch is provided.**

Easy Mode

Function	Details
Step data	• Setting of step data
Jog	• Jog operation • Return to origin
Test	• 1 step operation • Return to origin
Monitor	• Display of axis and step data no. • Display of two items selected from Position, Speed, Force.
ALM	• Active alarm display • Alarm reset
TB setting	• Reconnection of axis (Ver. 1.∗∗) • Displayed language setting (Ver. 2.∗∗) • Setting of easy/normal mode • Setting step data and selection of items from easy mode monitor

Menu Operations Flowchart

Menu
- Data
- Monitor
- Jog
- Test
- ALM
- TB setting

Data
Step data no.
Setting of two items selected below
Ver. 1.∗∗:
Position, Speed, Force, Acceleration, Deceleration
Ver. 2.∗∗:
Position, Speed, Pushing force, Acceleration, Deceleration, Movement MOD, Trigger LV, Pushing speed, Moving force, Area 1, Area 2, In position

Monitor
Display of step no.
Display of two items selected below
(Position, Speed, Force)

Jog
Return to origin
Jog operation

Test
1 step operation

ALM
Active alarm display
Alarm reset

TB setting
Reconnection of axis (Ver. 1.∗∗)
Japanese/English (Ver. 2.∗∗)
Easy/Normal
Set item

Normal Mode

Function	Details
Step data	• Step data setting
Parameter	• Parameters setting
Test	• Jog operation/Constant rate movement • Return to origin • Test drive (Specify a maximum of 5 step data and operate.) • Forced output (Forced signal output, Forced terminal output)
Monitor	• Drive monitor • Output signal monitor • Input signal monitor • Output terminal monitor • Input terminal monitor
ALM	• Active alarm display (Alarm reset) • Alarm log record display
File	• Data saving Save the step data and parameters of the controller which is being used for communication (it is possible to save four files, with one set of step data and parameters defined as one file). • Load to controller Loads the data which is saved in the teaching box to the controller which is being used for communication. • Delete the saved data. • File protection (Ver. 2.∗∗)
TB setting	• Display setting (Easy/Normal mode) • Language setting (Japanese/English) • Backlight setting • LCD contrast setting • Beep sound setting • Max. connection axis • Distance unit (mm/inch)
Reconnect	• Reconnection of axis

Menu Operations Flowchart

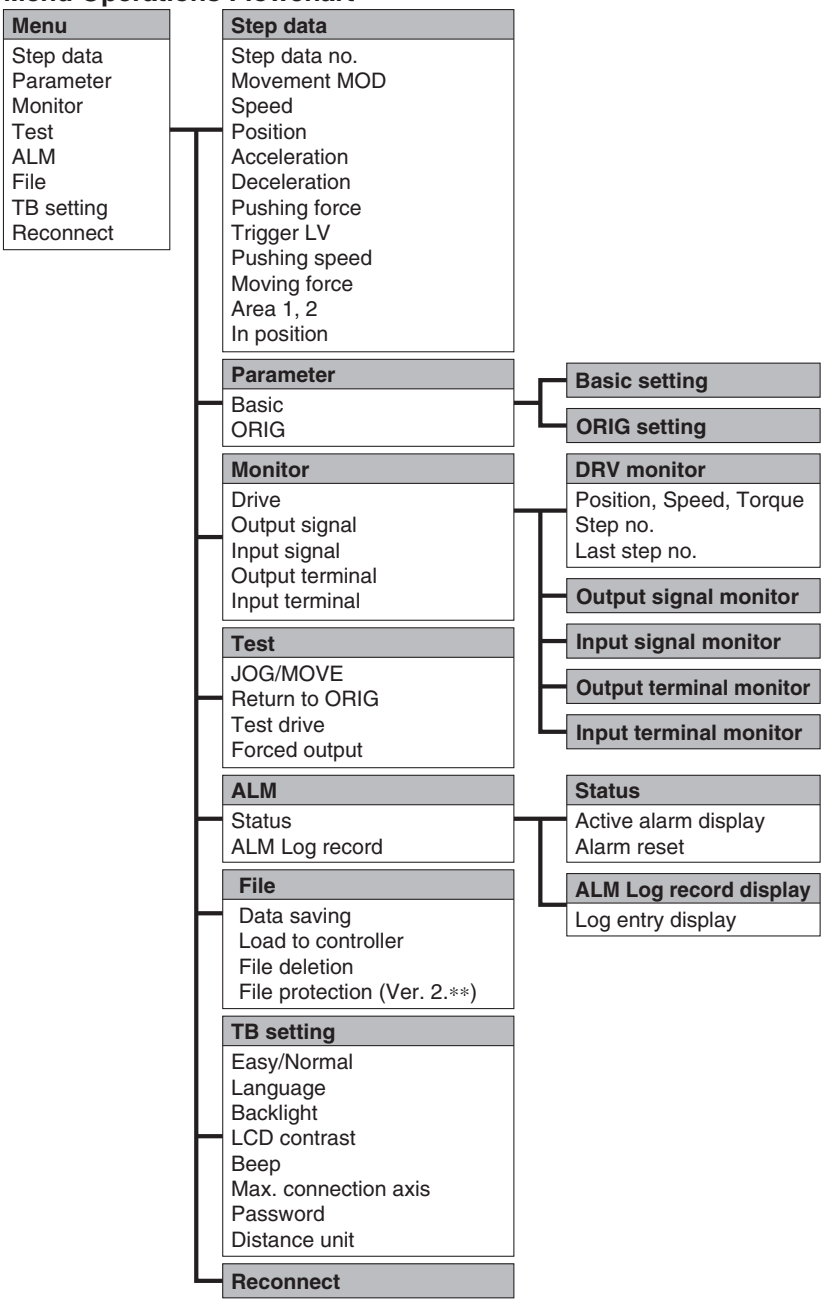

Dimensions

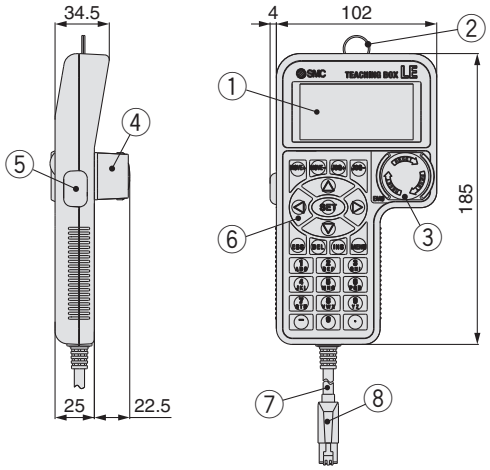

No.	Description	Function
1	**LCD**	A screen of liquid crystal display (with backlight)
2	**Ring**	A ring for hanging the teaching box
3	**Stop switch**	When switch is pushed in, the switch locks and stops. The lock is released when it is turned to the right.
4	**Stop switch guard**	A guard for the stop switch
5	**Enable switch (Option)**	Prevents unintentional operation (unexpected operation) of the jog test function. Other functions such as data change are not covered.
6	**Key switch**	Switch for each input
7	**Cable**	Length: 3 meters
8	**Connector**	A connector connected to CN4 of the controller

Gateway Unit
Series LEC-G

How to Order

⚠Caution

[CE-compliant products]
EMC compliance was tested by combining the electric actuator LES/LESH series and the controller LEC series.
The EMC depends on the configuration of the customer's control panel and the relationship with other electrical equipment and wiring. Therefore conformity to the EMC directive cannot be certified for SMC components incorporated into the customer's equipment under actual operating conditions. As a result it is necessary for the customer to verify conformity to the EMC directive for the machinery and equipment as a whole.

[UL-compliant products]
When conformity to UL is required, the electric actuator and controller should be used with a UL1310 Class 2 power supply.

Gateway unit LEC – G MJ2 □

Applicable Fieldbus protocols

MJ2	CC-Link Ver. 2.0
DN1	DeviceNet™
PR1	PROFIBUS DP
EN1	EtherNet/IP™

Mounting

Nil	Screw mounting
D Note)	DIN rail mounting

Note) DIN rail is not included. Order it separately.

Cable LEC – CG 1 – L

Cable type

1	Communication cable
2	Cable between branches

Cable length

K	0.3 m
L	0.5 m
1	1 m

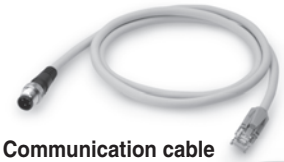

Communication cable

Cable between branches

Branch connector LEC – CGD

Branch connector

Terminating resistor LEC – CGR

Specifications

Model			LEC-GMJ2□		LEC-GDN1□	LEC-GPR1□	LEC-GEN1□
Communication specifications	Applicable system	Fieldbus	CC-Link		DeviceNet™	PROFIBUS DP	EtherNet/IP™
		Version Note 1)	Ver. 2.0		Release 2.0	V1	Release 1.0
	Communication speed [bps]		156 k/625 k/2.5 M /5 M/10 M		125 k/250 k/500 k	9.6 k/19.2 k/45.45 k/ 93.75 k/187.5 k/500 k/ 1.5 M/3 M/6 M/12 M	10 M/100 M
	Configuration file Note 2)		—		EDS file	GSD file	EDS file
	I/O occupation area		4 stations occupied (8 times setting)	Input 896 points 108 words Output 896 points 108 words	Input 200 bytes Output 200 bytes	Input 57 words Output 57 words	Input 256 bytes Output 256 bytes
	Power supply for communication	Power supply voltage [V] Note 6)	—		11 to 25 VDC	—	—
		Internal current consumption [mA]	—		100	—	—
	Communication connector specifications		Connector (Accessory)		Connector (Accessory)	D-sub	RJ45
	Terminating resistor		Not included		Not included	Not included	Not included
Power supply voltage [V] Note 6)			24 VDC ±10%				
Current consumption [mA]	Not connected to teaching box		200				
	Connected to teaching box		300				
EMG output terminal			30 VDC 1 A				
Controller specifications	Applicable controllers		Series LECP6, Series LECA6				
	Communication speed [bps] Note 3)		115.2 k/230.4 k				
	Max. number of connectable controllers Note 4)		12		8 Note 5)	5	12
Accessories			Power supply connector, communication connector			Power supply connector	
Operating temperature range [°C]			0 to 40 (No freezing)				
Operating humidity range [%RH]			90 or less (No condensation)				
Storage temperature range [°C]			–10 to 60 (No freezing)				
Storage humidity range [%RH]			90 or less (No condensation)				
Weight [g]			200 (Screw mounting), 220 (DIN rail mounting)				

Note 1) Please note that the version is subject to change.
Note 2) Each file can be downloaded from the SMC website, http://www.smcworld.com
Note 3) When using a teaching box (LEC-T1-□), set the communication speed to 115.2 kbps.
Note 4) A communication response time for 1 controller is approximately 30 ms.
Refer to "Communication Response Time Guideline" for response times when several controllers are connected.
Note 5) For step data input, up to 12 controllers connectable.
Note 6) When conformity to UL is required, the electric actuator and controller should be used with a UL1310 Class 2 power supply.

Communication Response Time Guideline

Response time between gateway unit and controllers depends on the number of controllers connected to the gateway unit.
For response time, refer to the graph below.

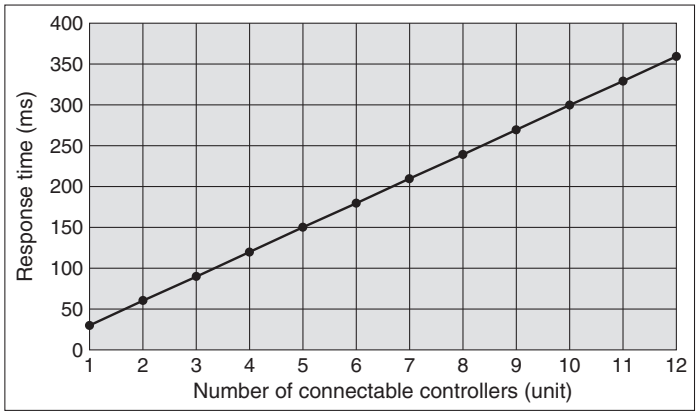

* This graph shows delay times between gateway unit and controllers.
Fieldbus network delay time is not included.

Dimensions

Screw mounting (LEC-G□□□)

Applicable Fieldbus protocol: CC-Link Ver. 2.0

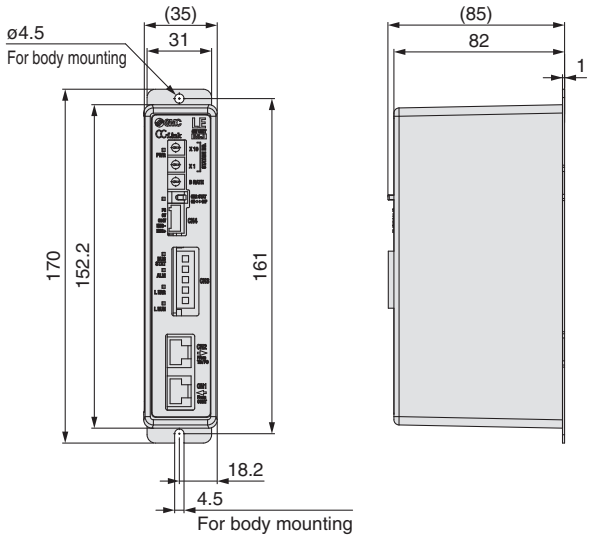

Applicable Fieldbus protocol: DeviceNet™

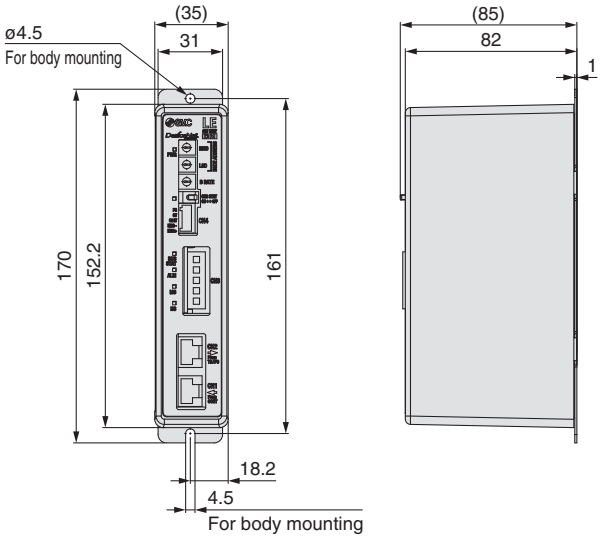

Applicable Fieldbus protocol: PROFIBUS DP

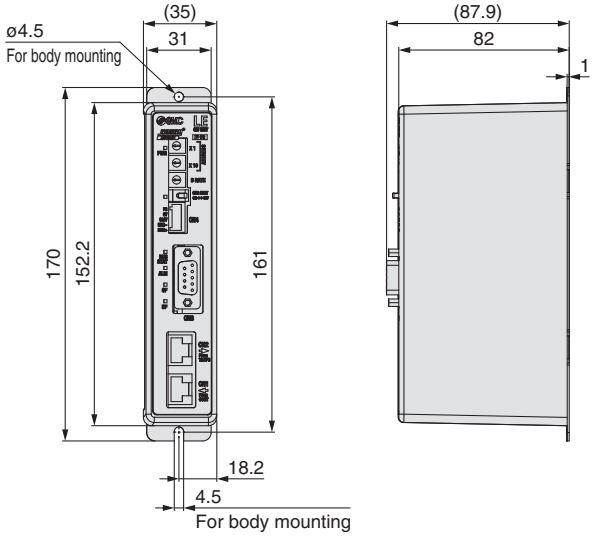

Applicable Fieldbus protocol: EtherNet/IP™

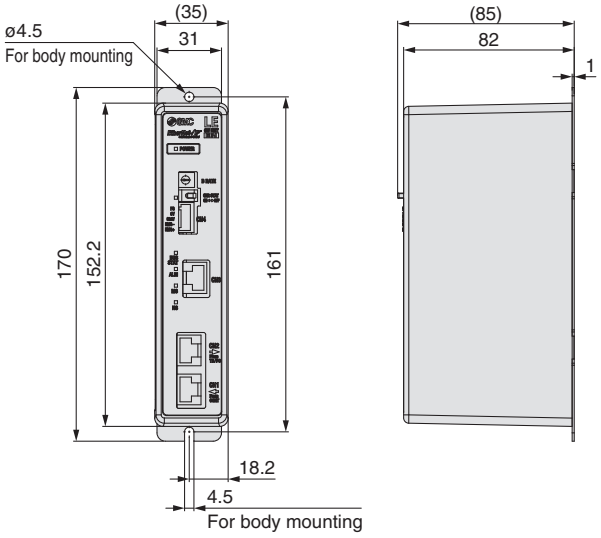

■**Trademark** DeviceNet™ is a trademark of ODVA. EtherNet/IP™ is a trademark of ODVA.

Dimensions

DIN rail mounting (LEC-G□□□D)

Applicable Fieldbus protocol: CC-Link Ver. 2.0

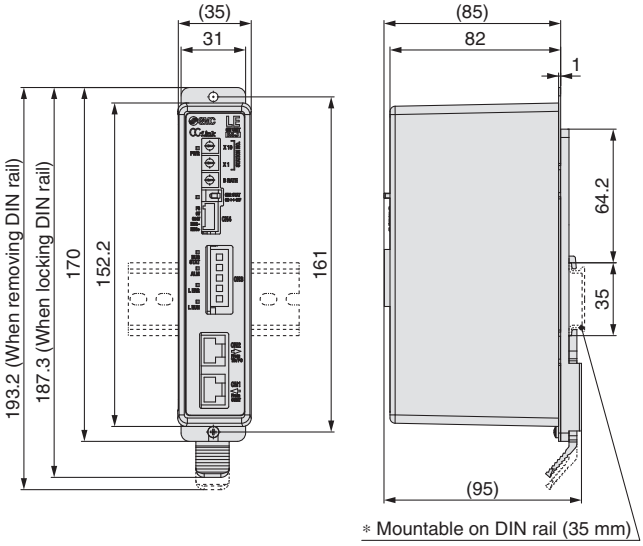

Applicable Fieldbus protocol: DeviceNet™

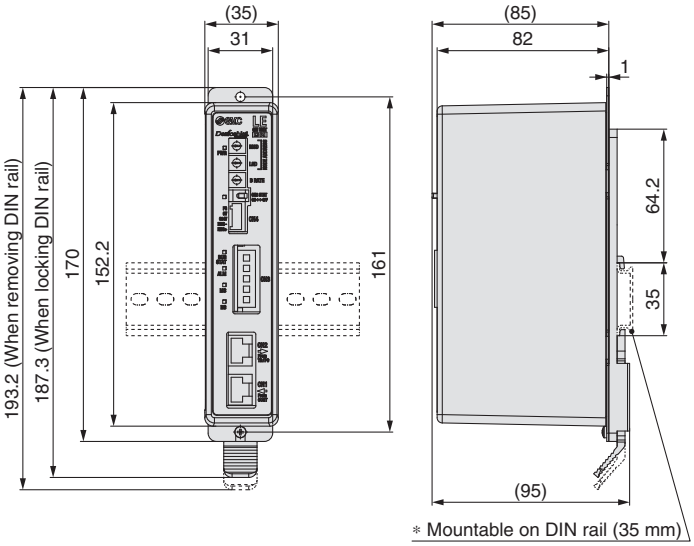

Applicable Fieldbus protocol: PROFIBUS DP

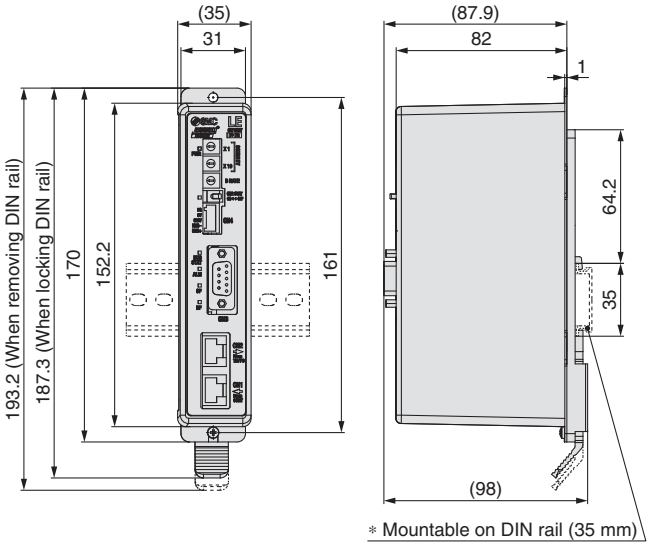

Applicable Fieldbus protocol: EtherNet/IP™

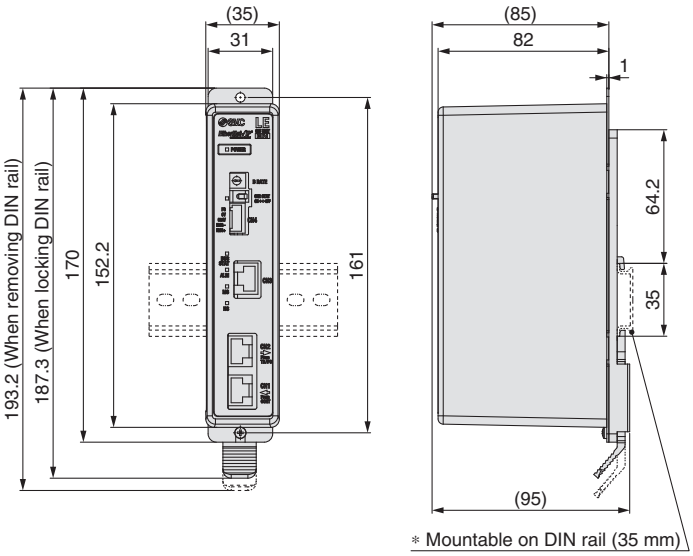

DIN rail
AXT100-DR-□

∗ For □, enter a number from the "No." line in the table below.
Refer to the dimensions above for the mounting dimensions.

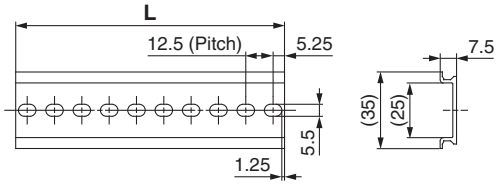

L Dimension [mm]

No.	1	2	3	4	5	6	7	8	9	10	11	12	13	14	15	16	17	18	19	20
L	23	35.5	48	60.5	73	85.5	98	110.5	123	135.5	148	160.5	173	185.5	198	210.5	223	235.5	248	260.5

No.	21	22	23	24	25	26	27	28	29	30	31	32	33	34	35	36	37	38	39	40
L	273	285.5	298	310.5	323	335.5	348	360.5	373	385.5	398	410.5	423	435.5	448	460.5	473	485.5	498	510.5

■**Trademark** DeviceNet™ is a trademark of ODVA. EtherNet/IP™ is a trademark of ODVA.

Programless Controller
Series LECP1

How to Order

LE C P 1 N 1 – LESH8RJ-50

Controller

Compatible motor

P	Step motor (Servo/24 VDC)

Number of step data (Points)

1	14 (Programless)

Parallel I/O type

N	NPN
P	PNP

I/O cable length [m]

Nil	Without cable
1	1.5
3	3
5	5

Option

Nil	Screw mounting
D Note)	DIN rail mounting

Note) DIN rail is not included. Order it separately.

Actuator part number

(Except cable specifications and actuator options)
Example: Enter "LESH8RJ-50" for the LESH8RJ-50B-R16N1.

∗ **When controller equipped type is selected when ordering the LE series, you do not need to order this controller.**

⚠Caution

[CE-compliant products]
EMC compliance was tested by combining the electric actuator LES/LESH series and the controller LEC series. The EMC depends on the configuration of the customer's control panel and the relationship with other electrical equipment and wiring. Therefore conformity to the EMC directive cannot be certified for SMC components incorporated into the customer's equipment under actual operating conditions. As a result it is necessary for the customer to verify conformity to the EMC directive for the machinery and equipment as a whole.
[UL-compliant products]
When conformity to UL is required, the electric actuator and controller should be used with a UL1310 Class 2 power supply.

The controller is sold as single unit after the compatible actuator is set.
Confirm that the combination of the controller and the actuator is correct.

∗ Refer to the operation manual for using the products. Please download it via our website, http://www.smcworld.com

Specifications

Basic Specifications

Item	LECP1
Compatible motor	Step motor (Servo/24 VDC)
Power supply Note 1)	Power supply voltage: 24 VDC ±10%, Max. current consumption: 3A (Peak 5A) Note 2) [Including the motor drive power, control power supply, stop, lock release]
Parallel input	6 inputs (Photo-coupler isolation)
Parallel output	6 outputs (Photo-coupler isolation)
Stop points	14 points (Position number 1 to 14(E))
Compatible encoder	Incremental A/B phase (800 pulse/rotation)
Memory	EEPROM
LED indicator	LED (Green/Red) one of each
7-segment LED display Note 3)	1 digit, 7-segment display (Red) Figures are expressed in hexadecimal ("10" to "15" in decimal number are expressed as "A" to "F")
Lock control	Forced-lock release terminal Note 4)
Cable length [m]	I/O cable: 5 or less, Actuator cable: 20 or less
Cooling system	Natural air cooling
Operating temperature range [°C]	0 to 40 (No freezing)
Operating humidity range [%RH]	90 or less (No condensation)
Storage temperature range [°C]	–10 to 60 (No freezing)
Storage humidity range [%RH]	90 or less (No condensation)
Insulation resistance [MΩ]	Between the housing and SG terminal: 50 (500 VDC)
Weight [g]	130 (Screw mounting), 150 (DIN rail mounting)

Note 1) Do not use the power supply of "inrush current prevention type" for the controller input power supply. When conformity to UL is required, the electric actuator and controller should be used with a UL1310 Class 2 power supply.
Note 2) The power consumption changes depending on the actuator model. Refer to the each actuator's operation manual etc. for details.
Note 3) "10" to "15" in decimal number are displayed as follows in the 7-segment LED.

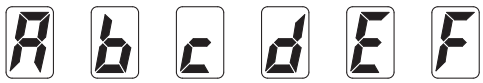

Decimal display	10	11	12	13	14	15
Hexadecimal display	A	b	c	d	E	F

Note 4) Applicable to non-magnetizing lock.

Controller Details

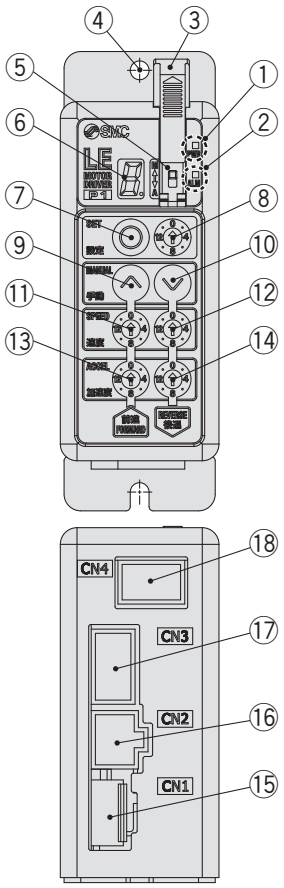

No.	Display	Description	Details
①	**PWR**	Power supply LED	Power supply ON/Servo ON : Green turns on Power supply ON/Servo OFF: Green flashes
②	**ALM**	Alarm LED	With alarm : Red turns on Parameter setting : Red flashes
③	—	Cover	Change and protection of the mode switch (Close the cover after changing switch)
④	—	FG	Frame ground (Tighten the bolt with the nut when mounting the controller. Connect the ground wire.)
⑤	—	Mode switch	Switch the mode between manual and auto.
⑥	—	7-segment LED	Stop position, the value set by ⑧ and alarm information are displayed.
⑦	**SET**	Set button	Decide the settings or drive operation in Manual mode.
⑧	—	Position selecting switch	Assign the position to drive (1 to 14), and the origin position (15).
⑨	**MANUAL**	Manual forward button	Perform forward jog and inching.
⑩		Manual reverse button	Perform reverse jog and inching.
⑪	**SPEED**	Forward speed switch	16 forward speeds are available.
⑫		Reverse speed switch	16 reverse speeds are available.
⑬	**ACCEL**	Forward acceleration switch	16 forward acceleration steps are available.
⑭		Reverse acceleration switch	16 reverse acceleration steps are available.
⑮	**CN1**	Power supply connector	Connect the power supply cable.
⑯	**CN2**	Motor connector	Connect the motor connector.
⑰	**CN3**	Encoder connector	Connect the encoder connector.
⑱	**CN4**	I/O connector	Connect I/O cable.

How to Mount

Controller mounting shown below.

1. Mounting screw (LECP1□□-□)

(Installation with two M4 screws)

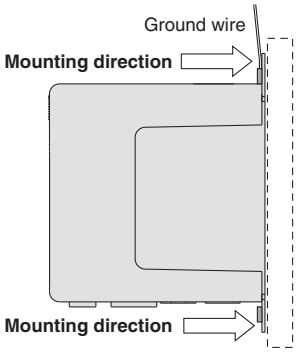

2. Grounding

Tighten the bolt with the nut when mounting the ground wire as shown below.

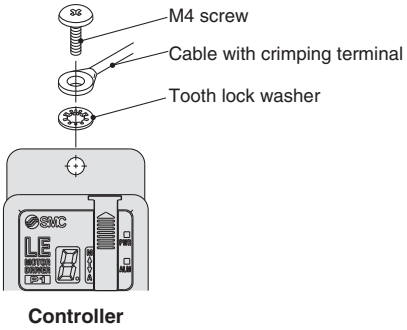

Note) When size 25 or more of the LES series are used, the space between the controllers should be 10 mm or more.

⚠Caution

- M4 screws, cable with crimping terminal and tooth lock washer are not included. Be sure to carry out grounding earth in order to ensure the noise tolerance.
- Use a watchmaker's screwdriver of the size shown below when changing position switch ⑧ and the set value of the speed/acceleration switch ⑪ to ⑭.

Size
End width **L**: 2.0 to 2.4 [mm]
End thickness **W**: 0.5 to 0.6 [mm]

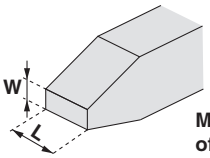

Magnified view of the end of the screwdriver

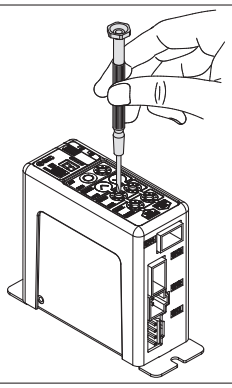

Dimensions

Screw mounting (LEC□1□□-□)

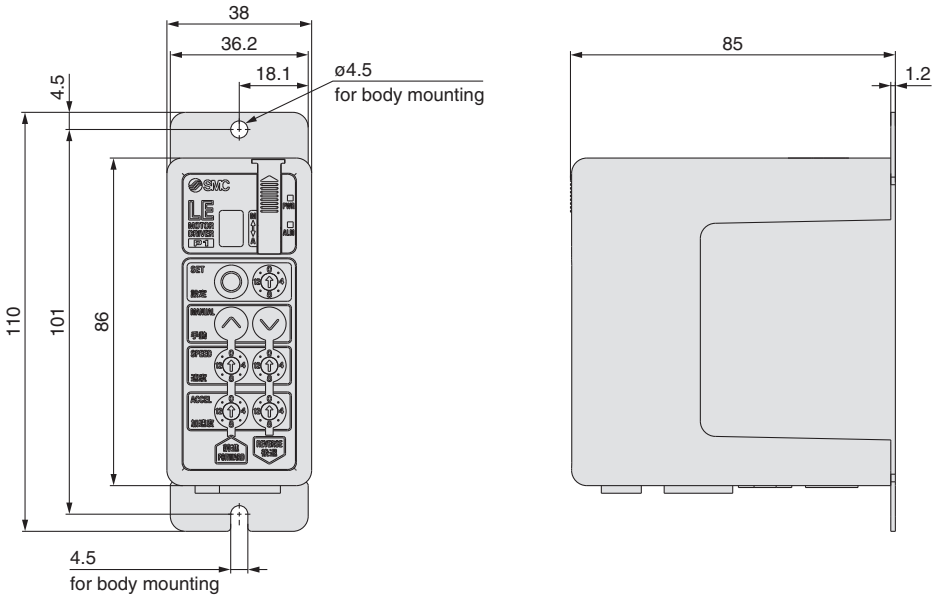

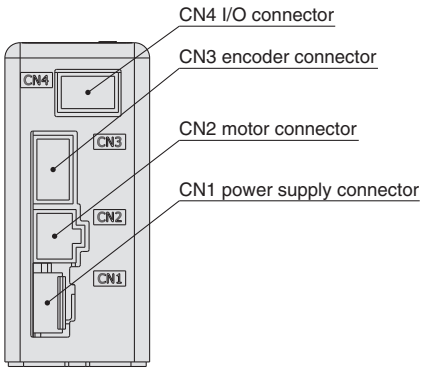

DIN rail mounting (LEC□1□□D-□)

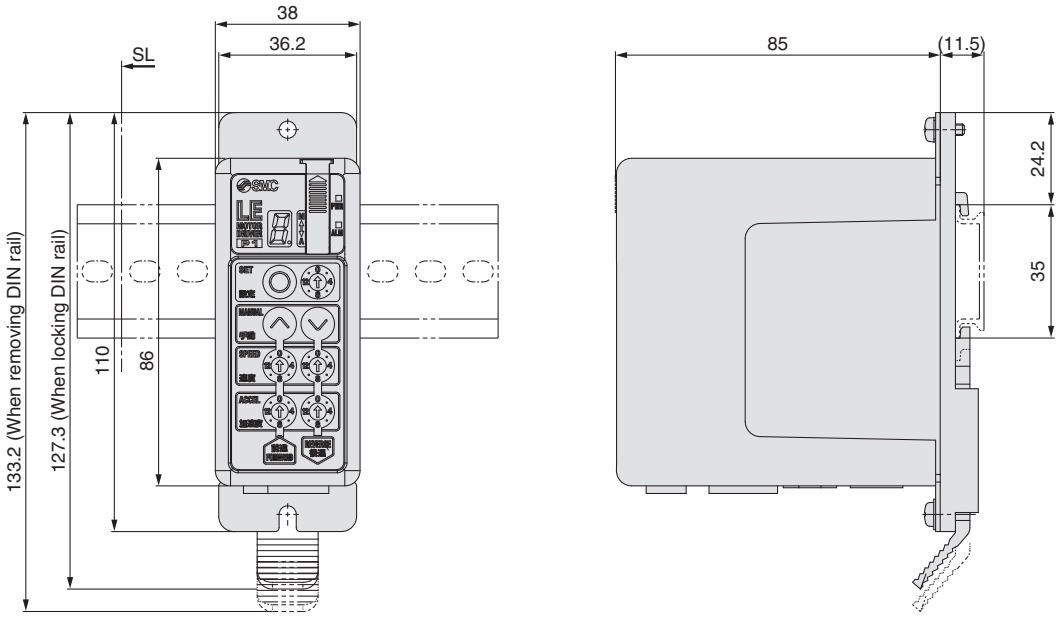

Wiring Example 1

Power Supply Connector: CN1

∗ When you connect a CN1 power supply connector, please use the power supply cable (LEC-CK1-1).
∗ Power supply cable (LEC-CK1-1) is an accessory.

CN1 Power Supply Connector Terminal for LECP1

Terminal name	Cable color	Function	Details
0V	Blue	Common supply (–)	M24V terminal/C24V terminal/BK RLS terminal are common (–).
M24V	White	Motor power supply (+)	Motor power supply (+) supplied to the controller
C24V	Brown	Control power supply (+)	Control power supply (+) supplied to the controller
BK RLS	Black	Lock release (+)	Input (+) for releasing the lock

Power supply cable for LECP1 (LEC-CK1-1)

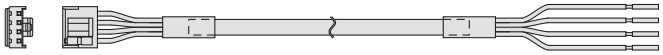

Wiring Example 2

Parallel I/O Connector: CN4

∗ When you connect a PLC, etc., to the CN4 parallel I/O connector, please use the I/O cable (LEC-CK4-□).
∗ The wiring should be changed depending on the type of the parallel I/O (NPN or PNP).

■NPN

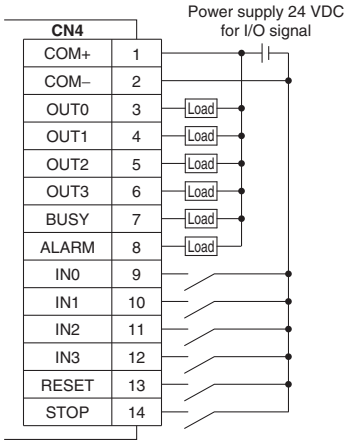

■PNP

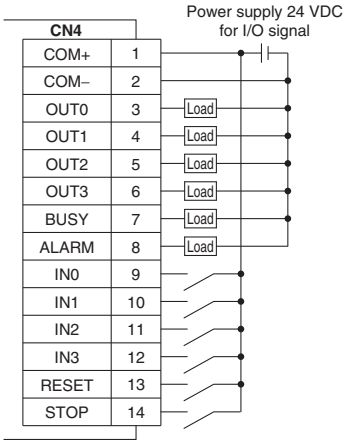

Input Signal

Name	Details
COM+	Connects the power supply 24 V for input/output signal
COM–	Connects the power supply 0 V for input/output signal
IN0 to IN3	• Instruction to drive (input as a combination of IN0 to IN3) • Instruction to return to origin (IN0 to IN3 all ON simultaneously) Example - (instruction to drive for position no. 5) IN3: OFF, IN2: ON, IN1: OFF, IN0: ON
RESET	Alarm reset and operation interruption During operation: deceleration stop from position at which signal is input (servo ON maintained) While alarm is active: alarm reset
STOP	Instruction to stop (after maximum deceleration stop, servo OFF)

Output Signal

Name	Details
OUT0 to OUT3	Turns on when the positioning or pushing is completed. (Output is instructed in the combination of OUT0 to 3.) Example - (operation complete for position no. 3) OUT3: OFF, OUT2: OFF, OUT1: ON, OUT0: ON
BUSY	Outputs when the actuator is moving
∗ALARM Note)	Not output when alarm is active or servo OFF

Note) Signal of negative-logic circuit (N.C.)

Input Signal [IN0 - IN3] Position Number Chart ○: OFF ●: ON

Position number	IN3	IN2	IN1	IN0
1	○	○	○	●
2	○	○	●	○
3	○	○	●	●
4	○	●	○	○
5	○	●	○	●
6	○	●	●	○
7	○	●	●	●
8	●	○	○	○
9	●	○	○	●
10 (A)	●	○	●	○
11 (B)	●	○	●	●
12 (C)	●	●	○	○
13 (D)	●	●	○	●
14 (E)	●	●	●	○
Retun to origin	●	●	●	●

Output Signal [OUT0 - OUT3] Position Number Chart ○: OFF ●: ON

Position number	OUT3	OUT2	OUT1	OUT0
1	○	○	○	●
2	○	○	●	○
3	○	○	●	●
4	○	●	○	○
5	○	●	○	●
6	○	●	●	○
7	○	●	●	●
8	●	○	○	○
9	●	○	○	●
10 (A)	●	○	●	○
11 (B)	●	○	●	●
12 (C)	●	●	○	○
13 (D)	●	●	○	●
14 (E)	●	●	●	○
Retun to origin	●	●	●	●

Signal Timing

(1) Return to Origin

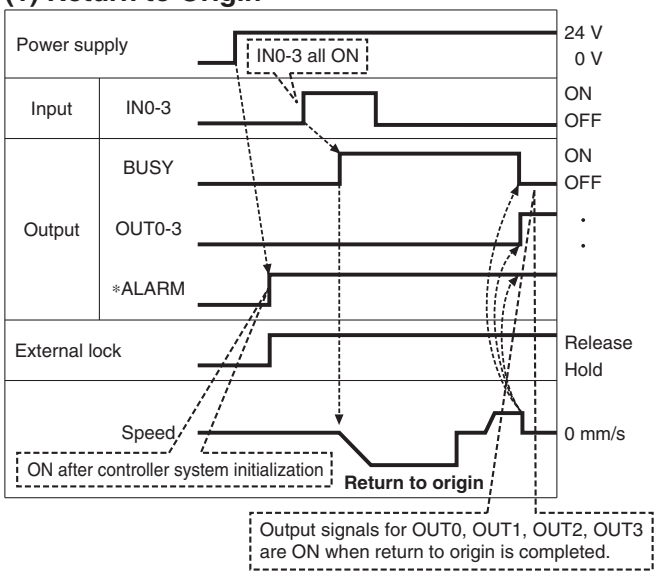

∗ "∗ALARM" is expressed as negative-logic circuit.

(2) Positioning Operation

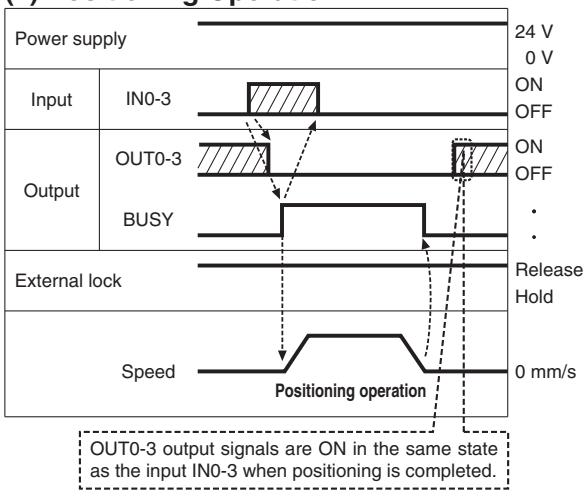

(3) Cut-off Stop (Reset Stop)

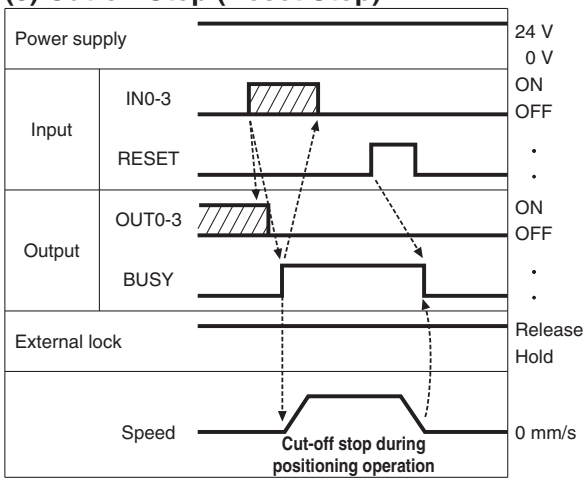

(4) Stop by the STOP Signal

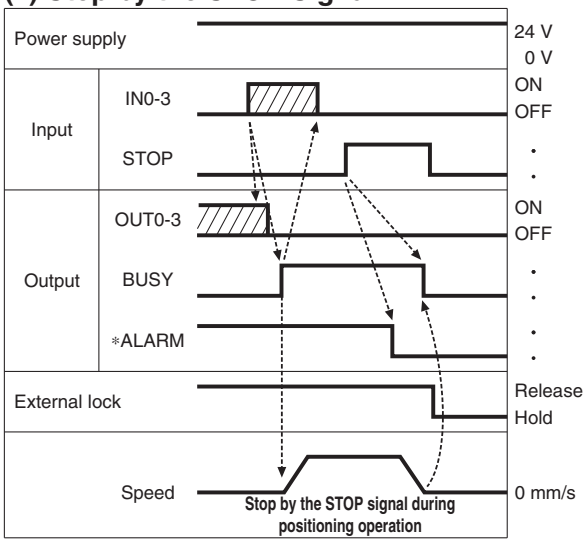

(5) Alarm Reset

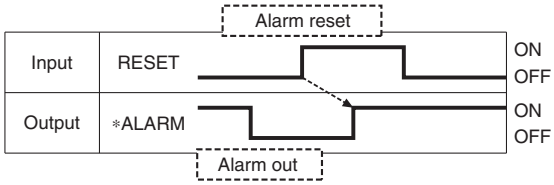

∗ "∗ALARM" is expressed as negative-logic circuit.

Options: Actuator Cable

[Robotic cable, standard cable for step motor (Servo/24 VDC)]

LE – CP – 1 – ☐

Cable length (L) [m]

1	1.5
3	3
5	5
8	8*
A	10*
B	15*
C	20*

∗ Produced upon receipt of order (Robotic cable only)

Cable type

Nil	Robotic cable (Flexible cable)
S	Standard cable

LE-CP-1/3/5/Cable length: 1.5 m, 3 m, 5 m

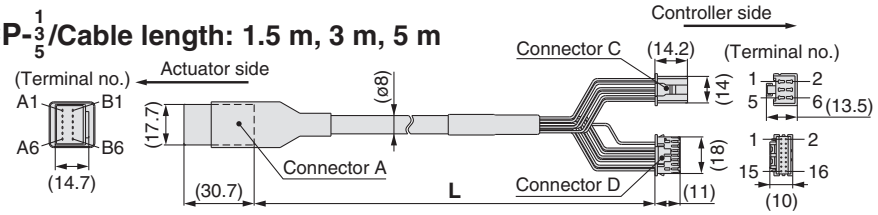

LE-CP-8/A/B/C/Cable length: 8 m, 10 m, 15 m, 20 m
(∗ Produced upon receipt of order)

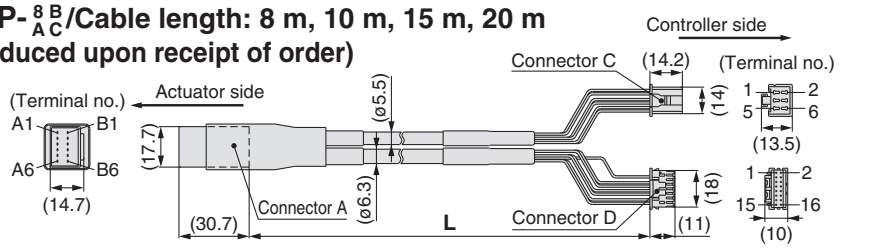

Signal	Connector A terminal no.	Cable color	Connector C terminal no.
A	B-1	Brown	2
$\overline{A}$	A-1	Red	1
B	B-2	Orange	6
$\overline{B}$	A-2	Yellow	5
COM-A/COM	B-3	Green	3
COM-B/—	A-3	Blue	4

Shield

		Cable color	Connector D terminal no.
Vcc	B-4	Brown	12
GND	A-4	Black	13
$\overline{A}$	B-5	Red	7
A	A-5	Black	6
$\overline{B}$	B-6	Orange	9
B	A-6	Black	8
		—	3

[Robotic cable, standard cable with lock and sensor for step motor (Servo/24 VDC)]

LE – CP – 1 – B – ☐

Cable length (L) [m]

1	1.5
3	3
5	5
8	8*
A	10*
B	15*
C	20*

∗ Produced upon receipt of order (Robotic cable only)

With lock and sensor

Cable type

Nil	Robotic cable (Flexible cable)
S	Standard cable

LE-CP-1/3/5/Cable length: 1.5 m, 3 m, 5 m

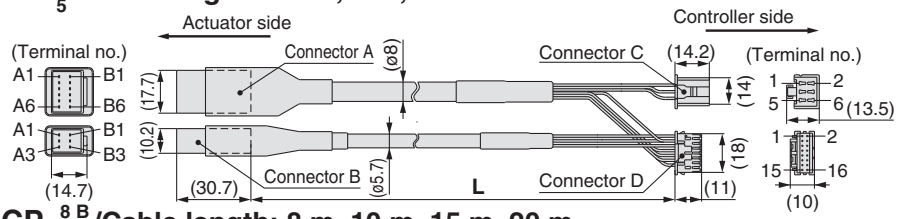

LE-CP-8/A/B/C/Cable length: 8 m, 10 m, 15 m, 20 m
(∗ Produced upon receipt of order)

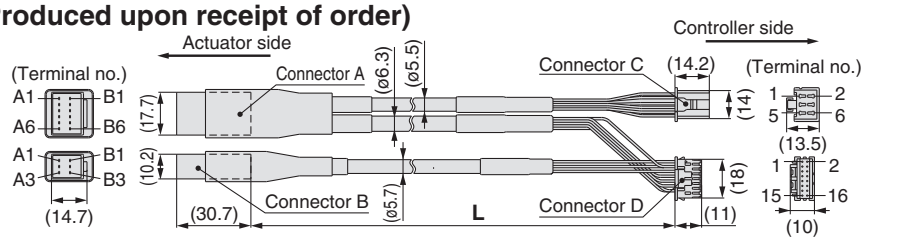

Signal	Connector A terminal no.	Cable color	Connector C terminal no.
A	B-1	Brown	2
$\overline{A}$	A-1	Red	1
B	B-2	Orange	6
$\overline{B}$	A-2	Yellow	5
COM-A/COM	B-3	Green	3
COM-B/—	A-3	Blue	4

Shield

		Cable color	Connector D terminal no.
Vcc	B-4	Brown	12
GND	A-4	Black	13
$\overline{A}$	B-5	Red	7
A	A-5	Black	6
$\overline{B}$	B-6	Orange	9
B	A-6	Black	8
		—	3

Signal	Connector B terminal no.		
Lock (+)	B-1	Red	4
Lock (–)	A-1	Black	5
Sensor (+) Note)	B-3	Brown	1
Sensor (–) Note)	A-3	Blue	2

Note) Not used for the LE series.

Options

[Power supply cable]

LEC−CK1−1

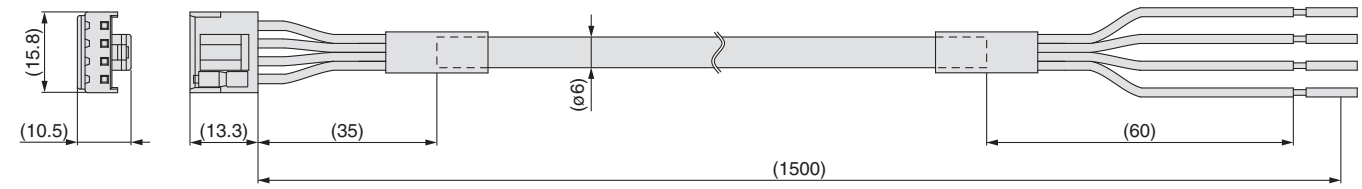

Terminal name	Covered color	Function
0V	Blue	Common supply (–)
M24V	White	Motor power supply (+)
C24V	Brown	Control power supply (+)
BK RLS	Black	Lock release (+)

∗ Conductor size: AWG20

[I/O cable]

LEC−CK4−□

Cable length (L) [m]

1	1.5
3	3
5	5

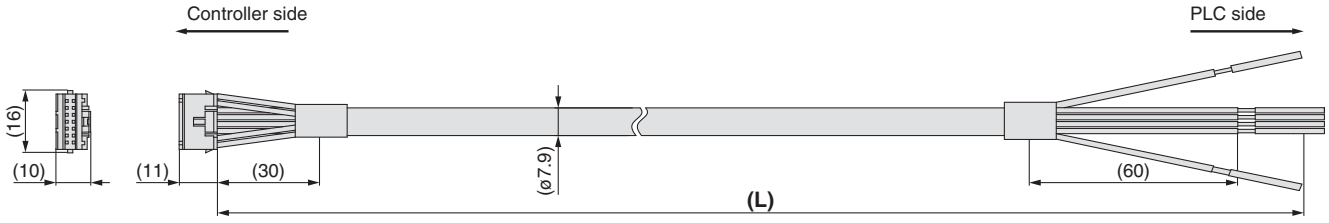

Terminal no.	Insulation color	Dot mark	Dot color	Function
1	Light brown	■	Black	COM+
2	Light brown	■	Red	COM–
3	Yellow	■	Black	OUT0
4	Yellow	■	Red	OUT1
5	Light green	■	Black	OUT2
6	Light green	■	Red	OUT3
7	Gray	■	Black	BUSY
8	Gray	■	Red	ALARM
9	White	■	Black	IN0
10	White	■	Red	IN1
11	Light brown	■ ■	Black	IN2
12	Light brown	■ ■	Red	IN3
13	Yellow	■ ■	Black	RESET
14	Yellow	■ ■	Red	STOP

∗ Conductor size: AWG26

∗ Parallel I/O signal is valid in auto mode. While the test function operates at manual mode, only the output is valid.

Step Motor Driver
Series LECPA

How to Order

⚠Caution

[CE-compliant products]

① EMC compliance was tested by combining the electric actuator LES/LESH series and the LECPA series.
The EMC depends on the configuration of the customer's control panel and the relationship with other electrical equipment and wiring. Therefore conformity to the EMC directive cannot be certified for SMC components incorporated into the customer's equipment under actual operating conditions. As a result it is necessary for the customer to verify conformity to the EMC directive for the machinery and equipment as a whole.

② For the LECPA series (step motor driver), EMC compliance was tested by installing a noise filter set (LEC-NFA).
Refer to page 81 for the noise filter set. Refer to the LECPA Operation Manual for installation.

[UL-compliant products]

When conformity to UL is required, the electric actuator and driver should be used with a UL1310 Class 2 power supply.

LECP AN 1 ☐ – LESH8RJ-50

Driver type

AN	Pulse input type (NPN)
AP	Pulse input type (PNP)

I/O cable length [m]

Nil	None
1	1.5
3	3*
5	5*

* Pulse input usable only with differential. Only 1.5 m cables usable with open collector.

Driver mounting

Nil	Screw mounting
D Note)	DIN rail mounting

Note) DIN rail is not included. Order it separately.

Actuator part number

(Except cable specifications and actuator options)
Example: Enter "LESH8RJ-50" for the LESH8RJ-50B-R16N1.

* When controller equipped type is selected when ordering the LE series, you do not need to order this driver.

The driver is sold as single unit after the compatible actuator is set.

Confirm that the combination of the driver and the actuator is correct.

<Check the following before use.>

① Check the actuator label for model number. This matches the driver.

② Check Parallel I/O configuration matches (NPN or PNP).

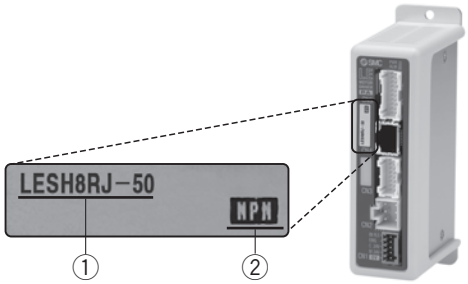

* Refer to the operation manual for using the products. Please download it via our website, http://www.smcworld.com

Specifications

Item	LECPA
Compatible motor	Step motor (Servo/24 VDC)
Power supply Note 1)	Power voltage: 24 VDC ±10% Maximum current consumption: 3 A (Peak 5 A) Note 2) [Including motor drive power, control power, stop, lock release]
Parallel input	5 inputs (Except photo-coupler isolation, pulse input terminal, COM terminal)
Parallel output	9 outputs (Photo-coupler isolation)
Pulse signal input	Maximum frequency: 60 kpps (Open collector), 200 kpps (Differential) Input method: 1 pulse mode (Pulse input in direction), 2 pulse mode (Pulse input in differing directions)
Compatible encoder	Incremental A/B phase (Encoder resolution: 800 pulse/rotation)
Serial communication	RS485 (Modbus protocol compliant)
Memory	EEPROM
LED indicator	LED (Green/Red) one of each
Lock control	Forced-lock release terminal Note 3)
Cable length [m]	I/O cable: 1.5 or less (Open collector), 5 or less (Differential) Actuator cable: 20 or less
Cooling system	Natural air cooling
Operating temperature range [°C]	0 to 40 (No freezing)
Operating humidity range [%RH]	90 or less (No condensation)
Storage temperature range [°C]	−10 to 60 (No freezing)
Storage humidity range [%RH]	90 or less (No condensation)
Insulation resistance [MΩ]	Between the housing and SG terminal: 50 (500 VDC)
Weight [g]	120 (Screw mounting), 140 (DIN rail mounting)

Note 1) Do not use the power supply of "inrush current prevention type" for the driver power supply. When conformity to UL is required, the electric actuator and driver should be used with a UL1310 Class 2 power supply.
Note 2) The power consumption changes depending on the actuator model. Refer to the specifications of actuator for more details.
Note 3) Applicable to non-magnetizing lock.

How to Mount

a) Screw mounting (LECPA□□-□) (Installation with two M4 screws)

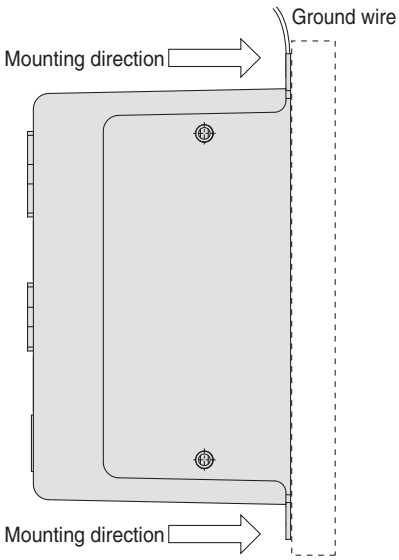

b) DIN rail mounting (LECPA□□D-□) (Installation with the DIN rail)

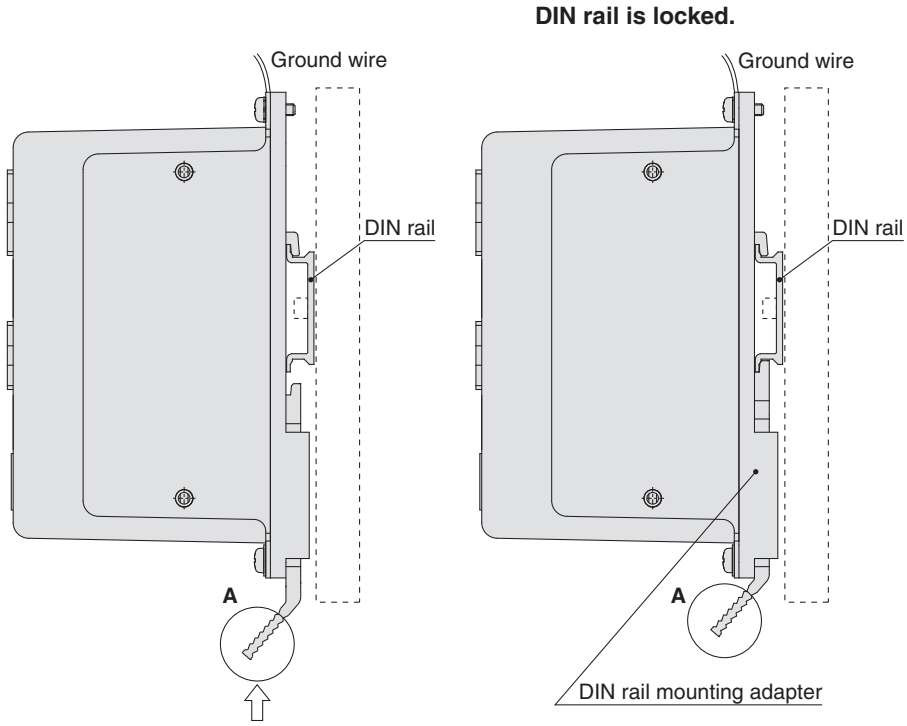

Hook the driver on the DIN rail and press the lever of section **A** in the arrow direction to lock it.

Note) The space between the drivers should be 10 mm or more.

DIN rail
AXT100-DR-□

∗ For □, enter a number from the "No." line in the table below.
Refer to the dimensions on page 77 for the mounting dimensions.

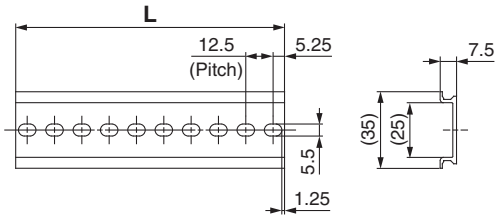

L Dimension [mm]

No.	1	2	3	4	5	6	7	8	9	10	11	12	13	14	15	16	17	18	19	20
L	23	35.5	48	60.5	73	85.5	98	110.5	123	135.5	148	160.5	173	185.5	198	210.5	223	235.5	248	260.5

No.	21	22	23	24	25	26	27	28	29	30	31	32	33	34	35	36	37	38	39	40
L	273	285.5	298	310.5	323	335.5	348	360.5	373	385.5	398	410.5	423	435.5	448	460.5	473	485.5	498	510.5

DIN rail mounting adapter
LEC-2-D0 (with 2 mounting screws)

This should be used when the DIN rail mounting adapter is mounted onto the screw mounting type driver afterwards.

Dimensions

a) Screw mounting (LECPA□□-□)

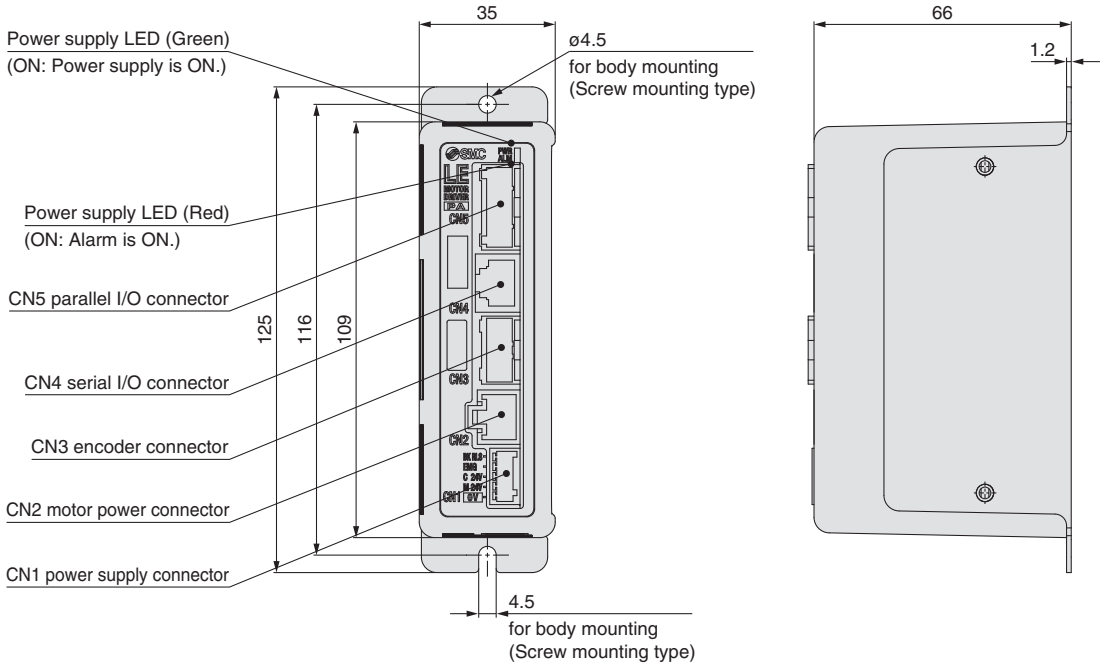

b) DIN rail mounting (LECPA□□D-□)

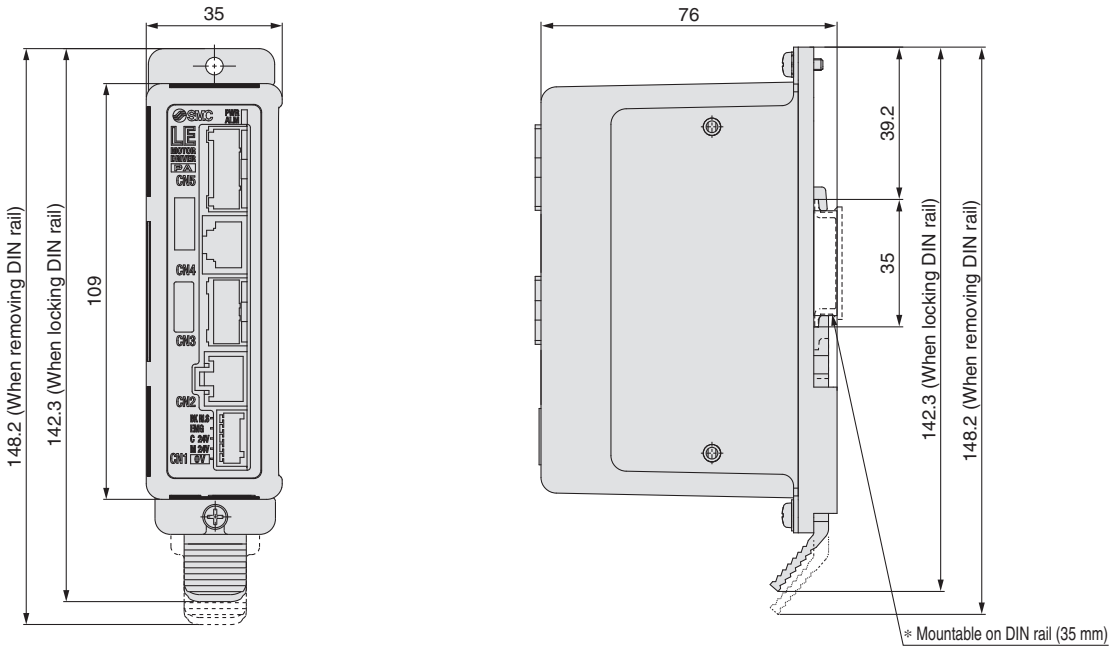

Wiring Example 1

Power Supply Connector: CN1 * Power supply plug is an accessory.

CN1 Power Supply Connector Terminal for LECPA (PHOENIX CONTACT FK-MC0.5/5-ST-2.5)

Terminal name	Function	Details
0V	Common supply (–)	M24V terminal/C24V terminal/EMG terminal/BK RLS terminal are common (–).
M24V	Motor power supply (+)	Motor power supply (+) supplied to the driver
C24V	Control power supply (+)	Control power supply (+) supplied to the driver
EMG	Stop (+)	Input (+) for releasing the stop
BK RLS	Lock release (+)	Input (+) for releasing the lock

Power supply plug for LECPA

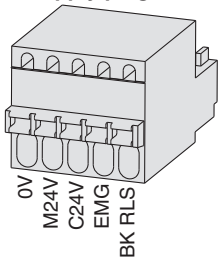

Wiring Example 2

Parallel I/O Connector: CN5

∗ When you connect a PLC, etc., to the CN5 parallel I/O connector, please use the I/O cable (LEC-CL5-□).
∗ The wiring should be changed depending on the type of the parallel I/O (NPN or PNP).

LECPAN□□-□ (NPN)

CN5		
Terminal name	Function	Pin no.
COM+	24 V	1
COM–	0 V	2
NP+	Pulse signal	3
NP–	Pulse signal	4
PP+	Pulse signal	5
PP–	Pulse signal	6
SETUP	Input	7
RESET	Input	8
SVON	Input	9
CLR	Input	10
TL	Input	11
TLOUT	Output	12
WAREA	Output	13
BUSY	Output	14
SETON	Output	15
INP	Output	16
SVRE	Output	17
∗ESTOP Note 2)	Output	18
∗ALARM Note 2)	Output	19
AREA	Output	20
FG	Round terminal	0.5-5

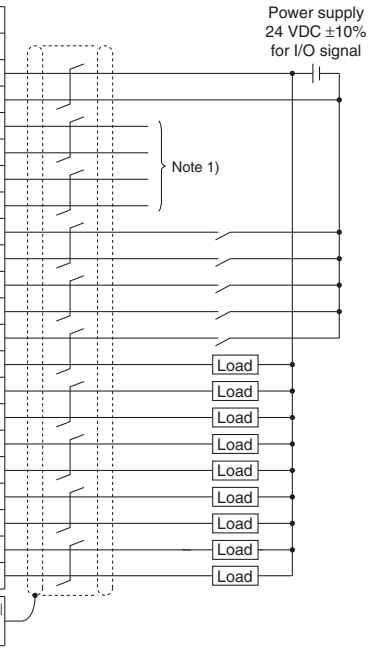

LECPAP□□-□ (PNP)

CN5		
Terminal name	Function	Pin no.
COM+	24 V	1
COM–	0 V	2
NP+	Pulse signal	3
NP–	Pulse signal	4
PP+	Pulse signal	5
PP–	Pulse signal	6
SETUP	Input	7
RESET	Input	8
SVON	Input	9
CLR	Input	10
TL	Input	11
TLOUT	Output	12
WAREA	Output	13
BUSY	Output	14
SETON	Output	15
INP	Output	16
SVRE	Output	17
∗ESTOP Note 2)	Output	18
∗ALARM Note 2)	Output	19
AREA	Output	20
FG	Round terminal	0.5-5

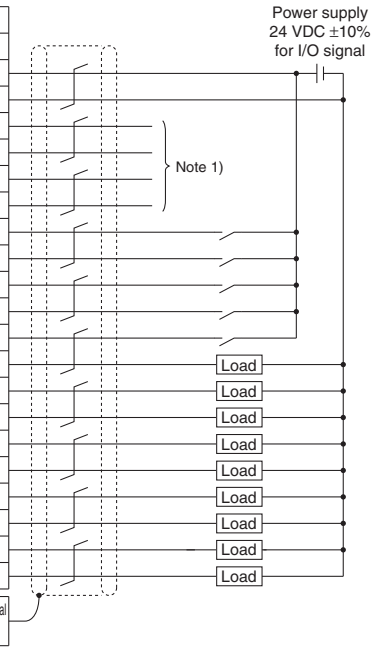

Note 1) For pulse signal wiring method, refer to "Pulse Signal Wiring Details".
Note 2) Output when the power supply of the driver is ON. (N.C.)

Input Signal

Name	Details
COM+	Connects the power supply 24 V for input/output signal
COM–	Connects the power supply 0 V for input/output signal
SETUP	Instruction to return to origin
RESET	Alarm reset
SVON	Servo ON instruction
CLR	Deviation reset
TL	Instruction to pushing operation

Output Signal

Name	Details
BUSY	Outputs when the actuator is operating
SETON	Outputs when returning to origin
INP	Outputs when target position is reached
SVRE	Outputs when servo is on
∗ESTOP Note 3)	Not output when EMG stop is instructed
∗ALARM Note 3)	Not output when alarm is generated
AREA	Outputs within the area output setting range
WAREA	Outputs within W-AREA output setting range
TLOUT	Outputs during pushing operation

Note 3) Signal of negative-logic circuit ON (N.C.)

Pulse Signal Wiring Details

•Pulse signal output of positioning unit is differential output

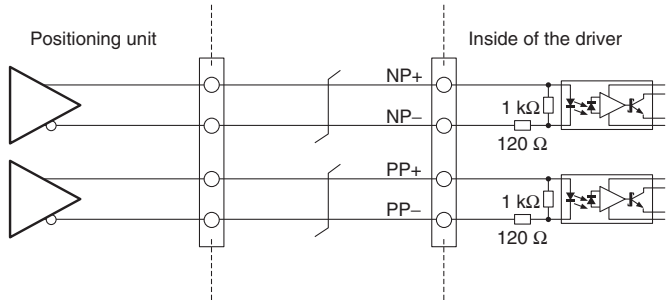

•Pulse signal output of positioning unit is open collector output

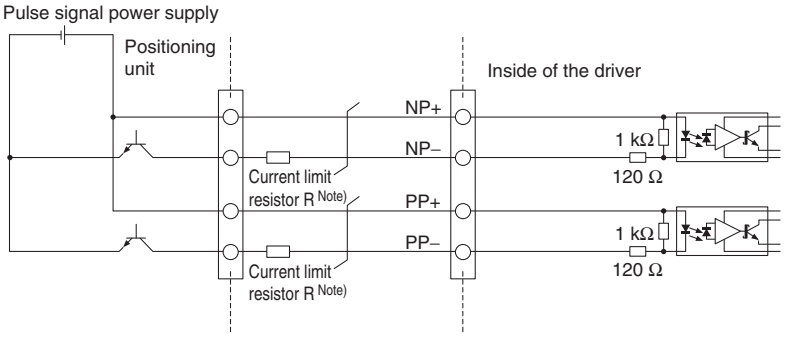

Note) Connect the current limit resistor R in series to correspond to the pulse signal voltage.

Pulse signal power supply voltage	Current limit resistor R specifications
24 VDC ±10%	3.3 kΩ ±5% (0.5 W or more)
5 VDC ±5%	390 Ω ±5% (0.1 W or more)

Signal Timing

Return to Origin

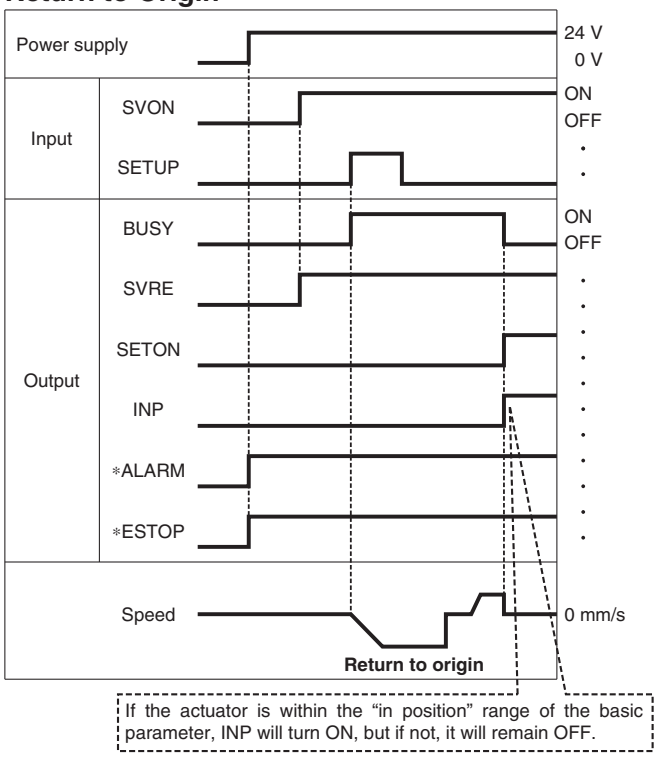

∗ "∗ALARM" and "∗ESTOP" are expressed as negative-logic circuit.

Positioning Operation

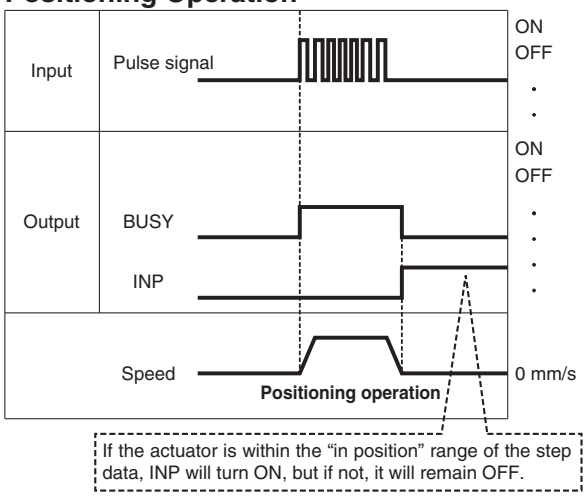

Pushing Operation

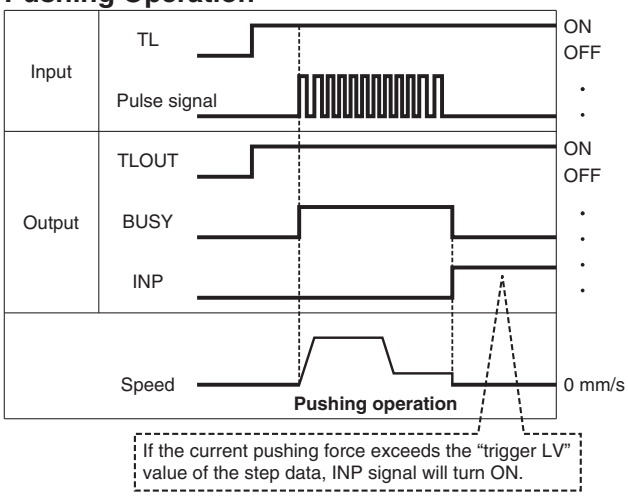

Note) If pushing operation is stopped when there is no pulse deviation, the moving part of the actuator may pulsate.

Alarm Reset

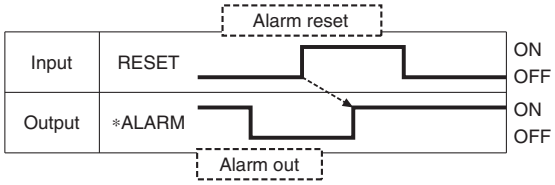

∗ "∗ALARM" is expressed as negative-logic circuit.

Options: Actuator Cable

[Robotic cable, standard cable for step motor (Servo/24 VDC)]

LE – CP – 1 – ☐

Cable length (L) [m]

1	1.5
3	3
5	5
8	8*
A	10*
B	15*
C	20*

∗ Produced upon receipt of order (Robotic cable only)

Cable type

Nil	Robotic cable (Flexible cable)
S	Standard cable

LE-CP-$^{1}_{3}_{5}$/Cable length: 1.5 m, 3 m, 5 m

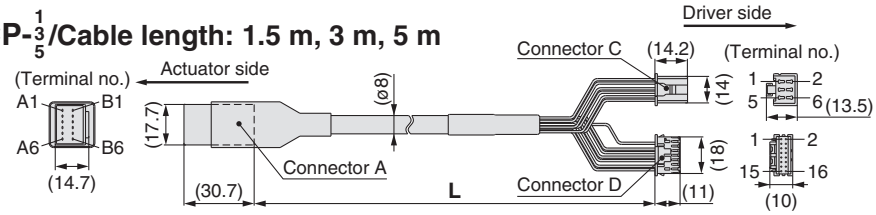

LE-CP-$^{8}_{A}$ $^{B}_{C}$/Cable length: 8 m, 10 m, 15 m, 20 m
(∗ Produced upon receipt of order)

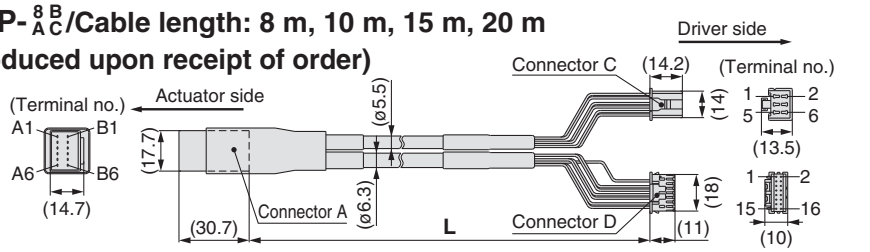

Signal	Connector A terminal no.	Cable color	Connector C terminal no.
A	B-1	Brown	2
$\overline{A}$	A-1	Red	1
B	B-2	Orange	6
$\overline{B}$	A-2	Yellow	5
COM-A/COM	B-3	Green	3
COM-B/—	A-3	Blue	4

Shield

		Cable color	Connector D terminal no.
Vcc	B-4	Brown	12
GND	A-4	Black	13
$\overline{A}$	B-5	Red	7
A	A-5	Black	6
$\overline{B}$	B-6	Orange	9
B	A-6	Black	8
		—	3

[Robotic cable, standard cable with lock and sensor for step motor (Servo/24 VDC)]

LE – CP – 1 – B – ☐

Cable length (L) [m]

1	1.5
3	3
5	5
8	8*
A	10*
B	15*
C	20*

∗ Produced upon receipt of order (Robotic cable only)

With lock and sensor

Cable type

Nil	Robotic cable (Flexible cable)
S	Standard cable

LE-CP-$^{1}_{3}_{5}$/Cable length: 1.5 m, 3 m, 5 m

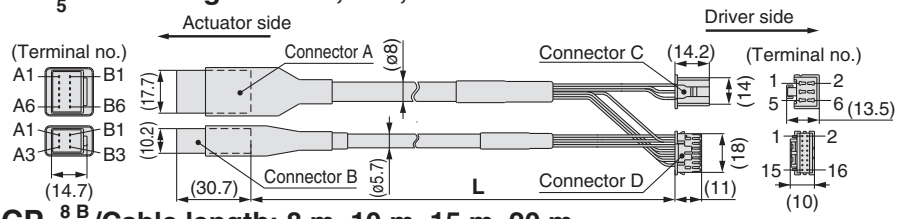

LE-CP-$^{8}_{A}$ $^{B}_{C}$/Cable length: 8 m, 10 m, 15 m, 20 m
(∗ Produced upon receipt of order)

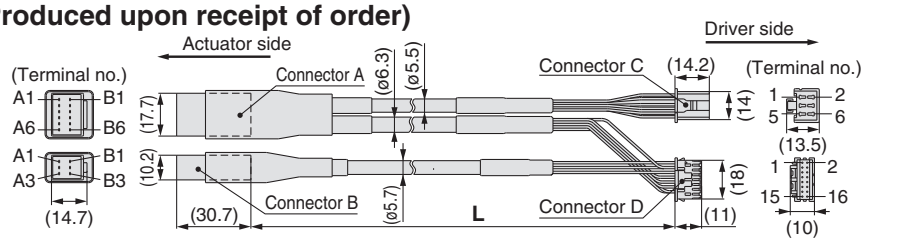

Signal	Connector A terminal no.	Cable color	Connector C terminal no.
A	B-1	Brown	2
$\overline{A}$	A-1	Red	1
B	B-2	Orange	6
$\overline{B}$	A-2	Yellow	5
COM-A/COM	B-3	Green	3
COM-B/—	A-3	Blue	4

Shield

		Cable color	Connector D terminal no.
Vcc	B-4	Brown	12
GND	A-4	Black	13
$\overline{A}$	B-5	Red	7
A	A-5	Black	6
$\overline{B}$	B-6	Orange	9
B	A-6	Black	8
		—	3

Signal	Connector B terminal no.		
Lock (+)	B-1	Red	4
Lock (–)	A-1	Black	5
Sensor (+) Note)	B-3	Brown	1
Sensor (–) Note)	A-3	Blue	2

Note) Not used for the LE series.

Options

[I/O cable]

LEC-C L5-1

I/O cable type

L5	For LECPA

I/O cable length (L)

1	1.5 m
3	3 m*
5	5 m*

* Pulse input usable only with differential. Only 1.5 m cables usable with open collector.

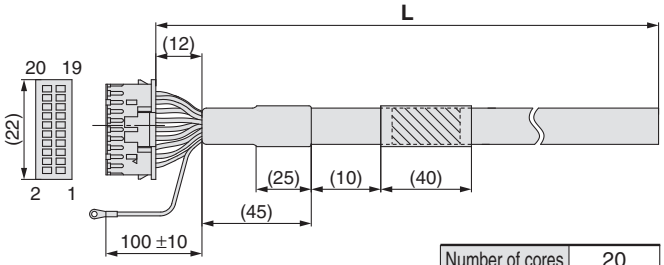

Number of cores	20
AWG size	24

Pin no.	Insulation color	Dot mark	Dot color
1	Light brown	■	Black
2	Light brown	■	Red
3	Yellow	■	Black
4	Yellow	■	Red
5	Light green	■	Black
6	Light green	■	Red
7	Gray	■	Black
8	Gray	■	Red
9	White	■	Black
10	White	■	Red
11	Light brown	■■	Black

Pin no.	Insulation color	Dot mark	Dot color
12	Light brown	■■	Red
13	Yellow	■■	Black
14	Yellow	■■	Red
15	Light green	■■	Black
16	Light green	■■	Red
17	Gray	■■	Black
18	Gray	■■	Red
19	White	■■	Black
20	White	■■	Red

Round terminal 0.5-5	Green

[Noise filter set]
Step Motor Driver (Pulse Input Type)

LEC-NFA

Contents of the set: 2 noise filters
(Manufactured by WURTH ELEKTRONIK: 74271222)

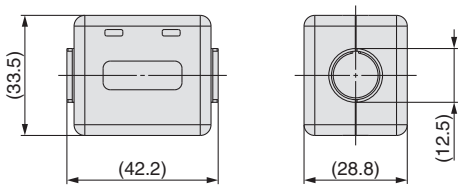

* Refer to the LECPA series Operation Manual for installation.

Series LEC

Windows®XP, Windows®7 compatible

Controller Setting Kit/LEC-W2

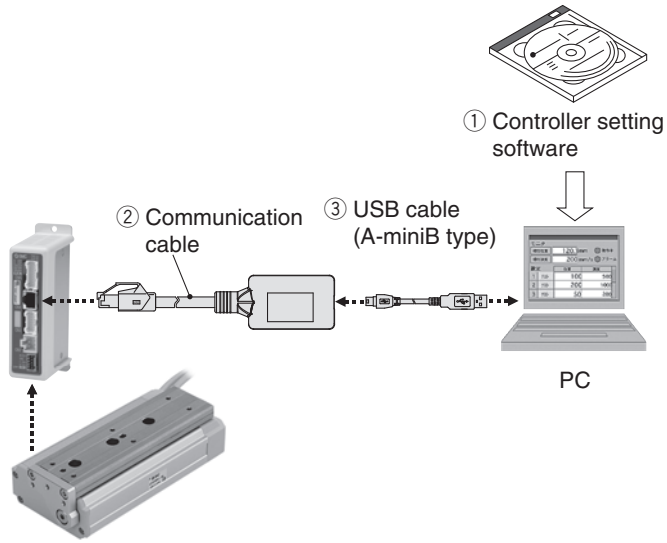

How to Order

LEC − W2

Controller setting kit
(Japanese and English are available.)

Contents

① **Controller setting software (CD-ROM)**
② **Communication cable**
③ **USB cable**
(Cable between the PC and the conversion unit)

Compatible Controllers/Driver

Step motor controller (Servo/24 VDC)	**Series LECP6**
Servo motor controller (24 VDC)	**Series LECA6**
Step motor driver (Pulse input type)	**Series LECPA**

Hardware Requirements

OS	IBM PC/AT compatible machine running Windows®XP (32-bit), Windows®7 (32-bit and 64-bit).
Communication interface	USB 1.1 or USB 2.0 ports
Display	XGA (1024 x 768) or more

∗ Windows® and Windows®7 are registered trademarks of Microsoft Corporation in the United States.
∗ Refer to SMC website for version update information, http://www.smcworld.com

Screen Example

Easy mode screen example

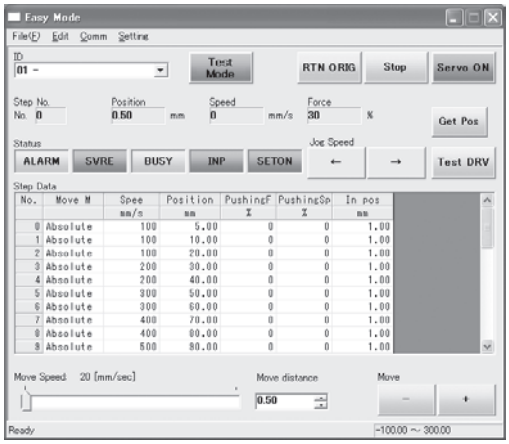

Easy operation and simple setting

- Allowing to set and display actuator step data such as position, speed, force, etc.
- Setting of step data and testing of the drive can be performed on the same page.
- Can be used to jog and move at a constant rate.

Normal mode screen example

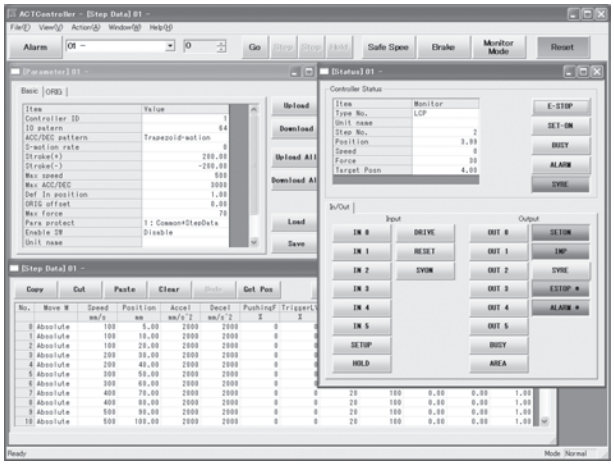

Detailed setting

- Step data can be set in detail.
- Signals and terminal status can be monitored.
- Parameters can be set.
- JOG and constant rate movement, return to origin, test operation and testing of forced output can be performed.

Series LEC
Teaching Box/LEC-T1

How to Order

LEC-T1-3JG□

Teaching box

Cable length [m]

3	3

Initial language

J	Japanese
E	English

∗ The displayed language can be changed to English or Japanese.

Stop switch

G	Equipped with stop switch

Enable switch

Nil	None
S	Equipped with enable switch

∗ Interlock switch for jog and test function

Specifications

Item	Description
Switch	Stop switch, Enable switch (Option)
Cable length [m]	3
Enclosure	IP64 (Except connector)
Operating temperature range [°C]	5 to 50
Operating humidity range [%RH]	90 or less (No condensation)
Weight [g]	350 (Except cable)

[CE-compliant products]
The EMC compliance of the teaching box was tested with the LECP6 series step motor controller (servo/24 VDC) and an applicable actuator.
[UL-compliant products]
When conformity to UL is required, the electric actuator and driver should be used with a UL1310 Class 2 power supply.

Standard functions
- **Chinese character display**
- **Stop switch is provided.**

Option
- **Enable switch is provided.**

Easy Mode

Function	Details
Step data	• Setting of step data
Jog	• Jog operation • Return to origin
Test	• 1 step operation Note 1) • Return to origin
Monitor	• Display of axis and step data no. • Display of two items selected from Position, Speed, Force.
ALM	• Active alarm display • Alarm reset
TB setting	• Reconnection of axis (Ver. 1.∗∗) • Displayed language setting (Ver. 2.∗∗) • Setting of easy/normal mode • Setting step data and selection of items from easy mode monitor

Menu Operations Flowchart

Menu
- Data
- Monitor
- Jog
- Test
- ALM
- TB setting

Data
Step data no.
Setting of two items selected below
Ver. 1.∗∗:
Position, Speed, Force, Acceleration, Deceleration
Ver. 2.∗∗:
Position, Speed, Pushing force, Acceleration, Deceleration, Movement MOD, Trigger LV, Pushing speed, Moving force, Area 1, Area 2, In position

Monitor
Display of step no.
Display of two items selected below
(Position, Speed, Force)

Jog
Return to origin
Jog operation

Test Note 1)
1 step operation

ALM
Active alarm display
Alarm reset

TB setting
Reconnection of axis (Ver. 1.∗∗)
Japanese/English (Ver. 2.∗∗)
Easy/Normal
Set item

Note 1) Not compatible with the LECPA.

Normal Mode

Function	Details
Step data	• Step data setting
Parameter	• Parameters setting
Test	• Jog operation/Constant rate movement • Return to origin • Test drive Note 1) (Specify a maximum of 5 step data and operate.) • Forced output (Forced signal output, Forced terminal output) Note 2)
Monitor	• Drive monitor • Output signal monitor Note 2) • Input signal monitor Note 2) • Output terminal monitor • Input terminal monitor
ALM	• Active alarm display (Alarm reset) • Alarm log record display
File	• Data saving Save the step data and parameters of the driver which is being used for communication (it is possible to save four files, with one set of step data and parameters defined as one file). • Load to driver Loads the data which is saved in the teaching box to the driver which is being used for communication. • Delete the saved data. • File protection (Ver. 2.**)
TB setting	• Display setting (Easy/Normal mode) • Language setting (Japanese/English) • Backlight setting • LCD contrast setting • Beep sound setting • Max. connection axis • Distance unit (mm/inch)
Reconnect	• Reconnection of axis

Menu Operations Flowchart

- **Menu**
  - Step data
  - Parameter
  - Monitor
  - Test
  - ALM
  - File
  - TB setting
  - Reconnect
- **Step data**
  - Step data no.
  - Movement MOD
  - Speed
  - Position
  - Acceleration
  - Deceleration
  - Pushing force
  - Trigger LV
  - Pushing speed
  - Moving force
  - Area 1, 2
  - In position
- **Parameter**
  - Basic
  - ORIG
  - **Basic setting**
  - **ORIG setting**
- **Monitor**
  - Drive
  - Output signal Note 2)
  - Input signal Note 2)
  - Output terminal
  - Input terminal
  - **DRV monitor**
    - Position, Speed, Torque
    - Step no.
    - Last step no.
  - **Output signal monitor**
  - **Input signal monitor**
  - **Output terminal monitor**
  - **Input terminal monitor**
- **Test**
  - JOG/MOVE
  - Return to ORIG
  - Test drive Note 1)
  - Forced output Note 2)
- **ALM**
  - Status
  - ALM Log record
  - **Status**
    - Active alarm display
    - Alarm reset
  - **ALM Log record display**
    - Log entry display
- **File**
  - Data saving
  - Load to driver
  - File deletion
  - File protection (Ver. 2.**)
- **TB setting**
  - Easy/Normal
  - Language
  - Backlight
  - LCD contrast
  - Beep
  - Max. connection axis
  - Password
  - Distance unit
- **Reconnect**

Note 1) Not compatible with the LECPA.
Note 2) The following signals are not compatible with the LECPA.
Input: CLR, TL
Output: TLOUT

Dimensions

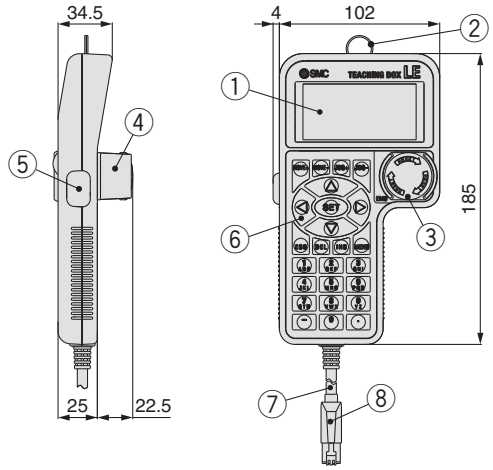

No.	Description	Function
1	**LCD**	A screen of liquid crystal display (with backlight)
2	**Ring**	A ring for hanging the teaching box
3	**Stop switch**	When switch is pushed in, the switch locks and stops. The lock is released when it is turned to the right.
4	**Stop switch guard**	A guard for the stop switch
5	**Enable switch (Option)**	Prevents unintentional operation (unexpected operation) of the jog test function. Other functions such as data change are not covered.
6	**Key switch**	Switch for each input
7	**Cable**	Length: 3 meters
8	**Connector**	A connector connected to CN4 of the driver

Revision history		
Edition B	∗ Addition of CE-compliant products ∗ P. 5: Change of speed–work load graphs Change of vertical graph for LESH8R Corrections of errors in horizontal and vertical graphs for LESH25R ∗ P. 13: Change of specifications, weight, power consumption, standby power consumption when operating, and maximum instantaneous power consumption ∗ P. 29: Change of dimensions of actuator cable ∗ P. 30: Addition of noise filter set ∗ P. 32: Addition of note for CE-compliant products ∗ P. 33: Change of function of enable switch	OQ
Edition C	∗ P. 15: Change of shape of wiring entry in dimensions	OZ
Edition D	∗ Addition of symmetrical type, LESH□L series ∗ Addition of in-line motor type, LESH□D series ∗ Addition of programless controller, LECP1 series ∗ Number of pages from 44 to 60	PY
Edition E	∗ Addition of compact type ∗ Addition of step motor driver, LECPA series ∗ Addition of gateway unit, LEC-G series ∗ Number of pages from 60 to 104	RP

⚠ Safety Instructions

These safety instructions are intended to prevent hazardous situations and/or equipment damage. These instructions indicate the level of potential hazard with the labels of **"Caution," "Warning"** or **"Danger."** They are all important notes for safety and must be followed in addition to International Standards (ISO/IEC)*1), and other safety regulations.

⚠ Caution: **Caution** indicates a hazard with a low level of risk which, if not avoided, could result in minor or moderate injury.

⚠ Warning: **Warning** indicates a hazard with a medium level of risk which, if not avoided, could result in death or serious injury.

⚠ Danger : **Danger** indicates a hazard with a high level of risk which, if not avoided, will result in death or serious injury.

*1) ISO 4414: Pneumatic fluid power – General rules relating to systems.
ISO 4413: Hydraulic fluid power – General rules relating to systems.
IEC 60204-1: Safety of machinery – Electrical equipment of machines. (Part 1: General requirements)
ISO 10218-1: Manipulating industrial robots – Safety.
etc.

⚠ Warning

1. **The compatibility of the product is the responsibility of the person who designs the equipment or decides its specifications.**
   Since the product specified here is used under various operating conditions, its compatibility with specific equipment must be decided by the person who designs the equipment or decides its specifications based on necessary analysis and test results. The expected performance and safety assurance of the equipment will be the responsibility of the person who has determined its compatibility with the product. This person should also continuously review all specifications of the product referring to its latest catalog information, with a view to giving due consideration to any possibility of equipment failure when configuring the equipment.
2. **Only personnel with appropriate training should operate machinery and equipment.**
   The product specified here may become unsafe if handled incorrectly. The assembly, operation and maintenance of machines or equipment including our products must be performed by an operator who is appropriately trained and experienced.
3. **Do not service or attempt to remove product and machinery/equipment until safety is confirmed.**
   1. The inspection and maintenance of machinery/equipment should only be performed after measures to prevent falling or runaway of the driven objects have been confirmed.
   2. When the product is to be removed, confirm that the safety measures as mentioned above are implemented and the power from any appropriate source is cut, and read and understand the specific product precautions of all relevant products carefully.
   3. Before machinery/equipment is restarted, take measures to prevent unexpected operation and malfunction.
4. **Contact SMC beforehand and take special consideration of safety measures if the product is to be used in any of the following conditions.**
   1. Conditions and environments outside of the given specifications, or use outdoors or in a place exposed to direct sunlight.
   2. Installation on equipment in conjunction with atomic energy, railways, air navigation, space, shipping, vehicles, military, medical treatment, combustion and recreation, or equipment in contact with food and beverages, emergency stop circuits, clutch and brake circuits in press applications, safety equipment or other applications unsuitable for the standard specifications described in the product catalog.
   3. An application which could have negative effects on people, property, or animals requiring special safety analysis.
   4. Use in an interlock circuit, which requires the provision of double interlock for possible failure by using a mechanical protective function, and periodical checks to confirm proper operation.

⚠ Caution

1. **The product is provided for use in manufacturing industries.**
   The product herein described is basically provided for peaceful use in manufacturing industries.
   If considering using the product in other industries, consult SMC beforehand and exchange specifications or a contract if necessary.
   If anything is unclear, contact your nearest sales branch.

Limited warranty and Disclaimer/ Compliance Requirements

The product used is subject to the following "Limited warranty and Disclaimer" and "Compliance Requirements".
Read and accept them before using the product.

Limited warranty and Disclaimer

1. The warranty period of the product is 1 year in service or 1.5 years after the product is delivered, whichever is first.*2)
   Also, the product may have specified durability, running distance or replacement parts. Please consult your nearest sales branch.
2. For any failure or damage reported within the warranty period which is clearly our responsibility, a replacement product or necessary parts will be provided.
   This limited warranty applies only to our product independently, and not to any other damage incurred due to the failure of the product.
3. Prior to using SMC products, please read and understand the warranty terms and disclaimers noted in the specified catalog for the particular products.

***2) Vacuum pads are excluded from this 1 year warranty.**
A vacuum pad is a consumable part, so it is warranted for a year after it is delivered.
Also, even within the warranty period, the wear of a product due to the use of the vacuum pad or failure due to the deterioration of rubber material are not covered by the limited warranty.

Compliance Requirements

1. The use of SMC products with production equipment for the manufacture of weapons of mass destruction (WMD) or any other weapon is strictly prohibited.
2. The exports of SMC products or technology from one country to another are governed by the relevant security laws and regulations of the countries involved in the transaction. Prior to the shipment of a SMC product to another country, assure that all local rules governing that export are known and followed.

⚠ Safety Instructions	Be sure to read "Handling Precautions for SMC Products" (M-E03-3) before using.

SMC Corporation
Akihabara UDX 15F,
4-14-1, Sotokanda, Chiyoda-ku, Tokyo 101-0021, JAPAN
Phone: 03-5207-8249 Fax: 03-5298-5362
http://www.smcworld.com
© 2013 SMC Corporation All Rights Reserved

Specifications are subject to change without prior notice and any obligation on the part of the manufacturer.
D-SZ
1st printing NZ printing RP 8150SZ Printed in Japan.

CC-Link Direct Input Type

Step Motor Controller

■ CC-Link Ver. 1.10 compliant

■ 3 types of operation mode available.

Single numerical data instructions (Occupied number of stations: 1)

[Max. number of connectable controllers: 42 units]
Can be operated by instructing the Movement MOD (movement mode) and changing another item in the preset step data.

Half numerical data instructions (Occupied number of stations: 2)

[Max. number of connectable controllers: 32 units]
Can be operated by changing up to six items in the preset step data.

Full numerical data instructions (Occupied number of stations: 4)

[Max. number of connectable controllers: 16 units]
Can be operated by inputting numerical data to all 12 step data items from the PLC.

■ The position and speed can be monitored by the PLC.

■ Step data can be edited from the PLC.

(Except single numerical data instructions)

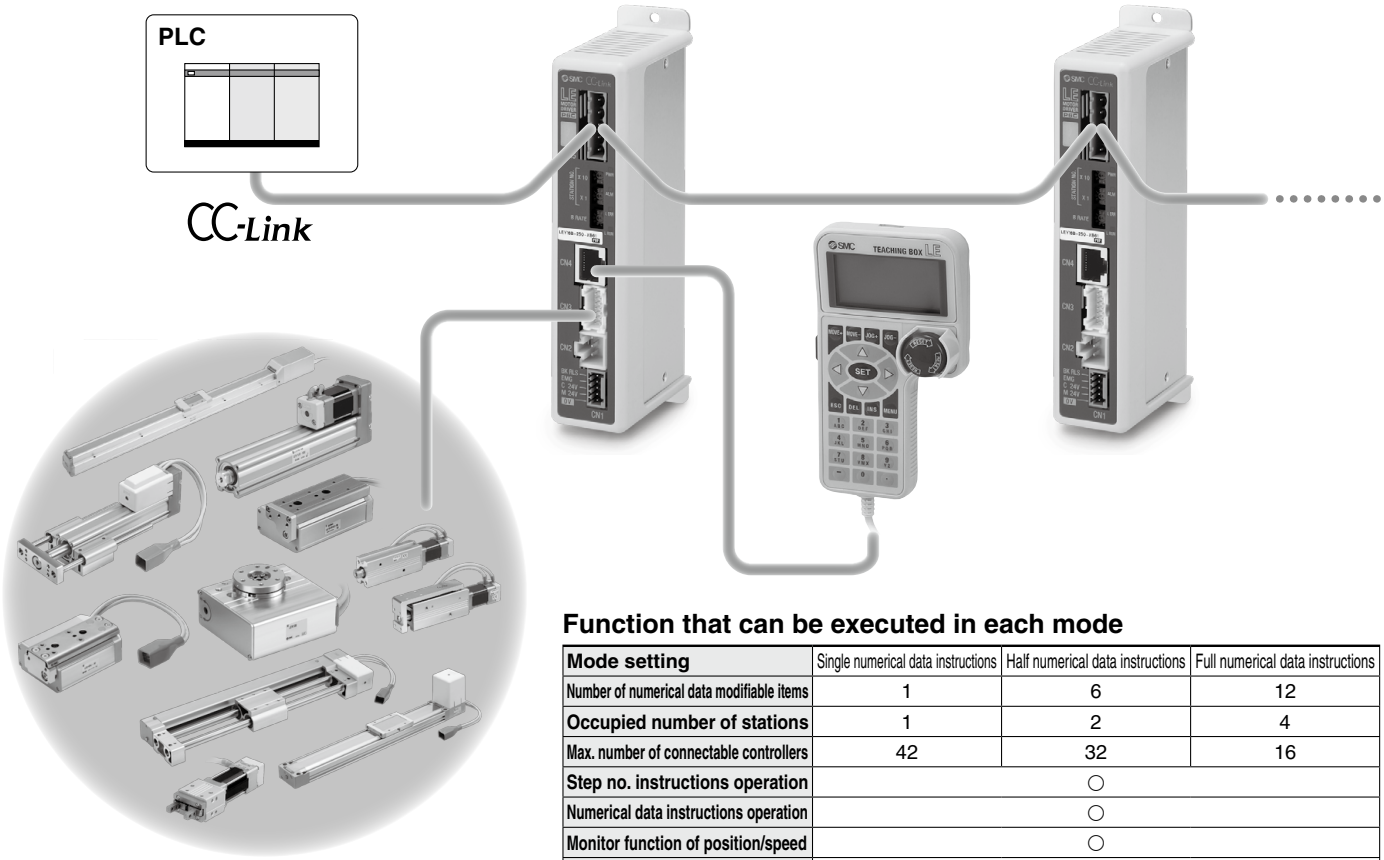

Function that can be executed in each mode

Mode setting	Single numerical data instructions	Half numerical data instructions	Full numerical data instructions
Number of numerical data modifiable items	1	6	12
Occupied number of stations	1	2	4
Max. number of connectable controllers	42	32	16
Step no. instructions operation	○		
Numerical data instructions operation	○		
Monitor function of position/speed	○		
Step data editing function	○		

Series LECPMJ

SMC

How to Order

Actuator + Controller

LEFS16B-100B – S1 MJ S ☐

Actuator type

Refer to "How to Order" in the actuator catalog.
For compatible actuators, refer to the table below. Example: LEFS16B-100B-S1MJS

Compatible actuators	Catalog no.
Electric Actuator/Rod Type Series **LEY**	E102
Electric Actuator/Guide Rod Type Series **LEYG**	
Electric Actuator/Slider Type Series **LEF**	
Electric Slide Table Series **LES/LESH**	
Electric Rotary Table Series **LER**	
Electric Actuator/Guide Rod Slider Series **LEL**	
Electric Actuator/Miniature Type Series **LEPY/LEPS**	
Electric Gripper (2-finger Type, 3-finger Type) Series **LEH**	
Electric Actuator/Low Profile Slider Type Series **LEM**	ES100-98

Controller mounting

Nil	Screw mounting
D	DIN rail mounting

∗ DIN rail is not included.
Order it separately.

Communication plug connector

Nil	None
S	Straight type
T	T-branch type

Controller type

MJ	CC-Link direct input type

Actuator cable

Controller

LE C P MJ ☐ ☐ – ☐

Controller

Compatible motor

P	Step motor (Servo/24 VDC)

Controller type

MJ	CC-Link direct input type

Communication plug connector

Nil	None
S	Straight type
T	T-branch type

Controller mounting

Nil	Screw mounting
D	DIN rail mounting

∗ DIN rail is not included.
Order it separately.

Actuator part number

(Except cable specifications and actuator options)
Example: Enter "**LEFS16B-100**" for the LEFS16B-100B-S1MJS.

Communication plug connector

LEC – CMJ – S

Controller type

MJ	CC-Link direct input type

Connector type

S	Straight type
T	T-branch type

Straight type
LEC-CMJ-S

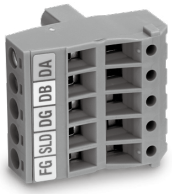

T-branch type
LEC-CMJ-T

Specifications

Item			LECPMJ				
Compatible motor			Step motor (Servo/24 VDC)				
Power supply Note 1)			Power voltage: 24 VDC ±10% Maximum current consumption: 3 A (Peak 5 A) Note 2) [Including motor drive power, control power, lock release]				
Compatible encoder			Incremental A/B phase (800 pulse/rotation)				
Communication specifications	**Fieldbus**		CC-Link Ver. 1.10				
	Communication speed [bps]		156 k/625 k/2.5 M/5 M/10 M				
	Communication method		Broadcast polling				
	Station type		Remote device station				
	I/O occupation area		1 station (Input 32 points/4 words Output 32 points/4 words)	2 stations (Input 64 points/8 words Output 64 points/8 words)		4 stations (Input 128 points/16 words Output 128 points/16 words)	
	Applicable communication cable		CC-Link dedicated cable				
	Maximum cable length	**Communication speed [bps]**	156 k	625 k	2.5 M	5 M	10 M
		Total cable length [m]	1200	900	400	160	100
Serial communication			RS485 (Modbus protocol)				
Memory			EEPROM				
LED indicator			PWR, ALM, L ERR, L RUN				
Lock control			Forced-lock release terminal Note 3)				
Cable length [m]			Actuator cable: 20 or less				
Cooling system			Natural air cooling				
Operating temperature range [°C]			0 to 40 (No freezing)				
Operating humidity range [%RH]			90 or less (No condensation)				
Storage temperature range [°C]			–10 to 60 (No freezing)				
Storage humidity range [%RH]			90 (No condensation)				
Insulation resistance [MΩ]			Between the housing and FG terminal 50 (500 VDC)				
Weight [g]			170 (Screw mounting), 190 (DIN rail mounting)				

Note 1) Do not use the power supply of "inrush current prevention type" for the controller power supply. When conformity to UL is required, the electric actuator and controller should be used with a UL1310 Class 2 power supply.
Note 2) The power consumption changes depending on the actuator model. Refer to the specifications of actuator for more details.
Note 3) Applicable to non-magnetizing lock.

Function that can be executed in each mode

Mode setting [Occupied number of stations] Note 4)	Single numerical data instructions [1]	Half numerical data instructions [2]	Full numerical data instructions [4]
Step no. instructions operation	○		
Numerical data instructions operation	○		
Number of numerical data modifiable items	1	6	12
Monitor function of position/speed	○		
Step data editing function	○ Note 5)		
Max. number of connectable controllers Note 6)	42	32	16

Note 4) The modes can be set by registering the occupied number of stations with basic parameter "Option setting 1" of the controller.
Note 5) It is possible to edit it from teaching box/controller setting software for "Single numerical data instructions". It is possible to edit it from teaching box/controller setting software and PLC (CC-Link) for "Half numerical data instructions" and "Full numerical data instructions".
Note 6) Maximum number of units specified in CC-Link communication specifications.

Modifiable step data item in each mode

●: Numerical data modifiable items

Mode setting	Step data item											
	Movement MOD	Speed	Position	Acceleration	Pushing speed	Pushing force	Deceleration	Trigger LV	Moving force	Area 1	Area 2	In position
Single numerical data instructions	●	←				Only one item can be changed from 11 items, ranging from Speed to In position.						→
Half numerical data instructions	●	●	●	← Only one item can be changed from Acceleration/Pushing speed. →		●	← Only one item can be changed from Deceleration/Trigger LV. →					
Full numerical data instructions	●	●	●	●	●	●	●	●	●	●	●	●

Note 7) Step data items, except items that have been changed, reference data registered in the controller.
Note 8) Refer to the LECPMJ operation manual for details of the step data items.

Dimensions

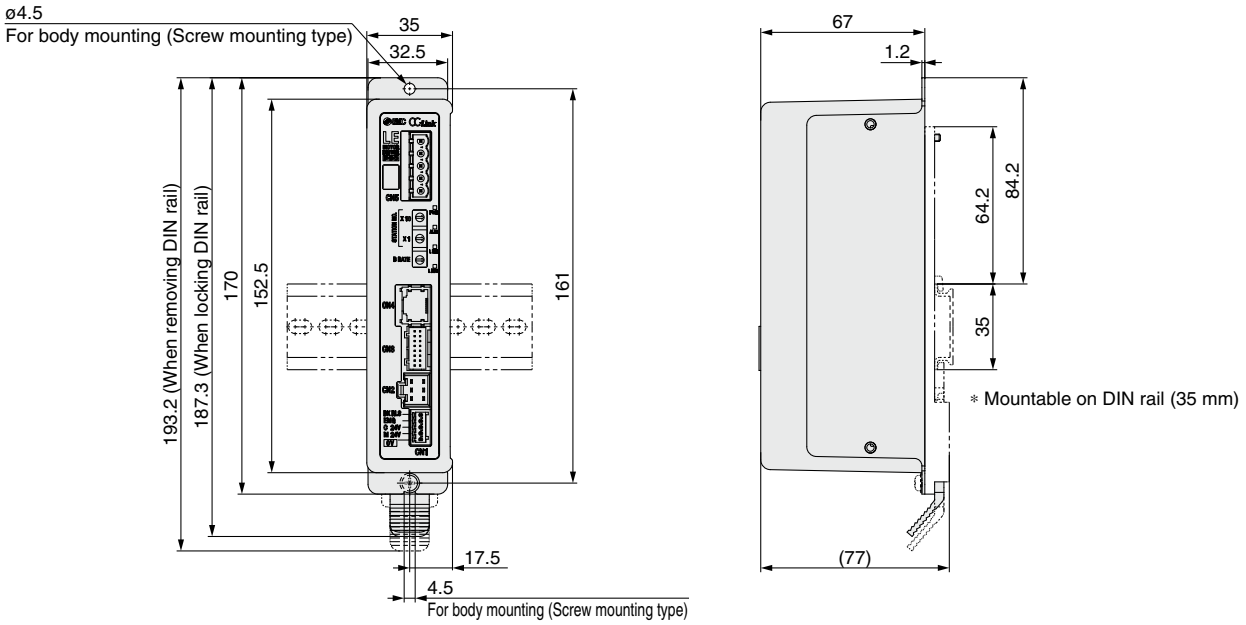

System Construction

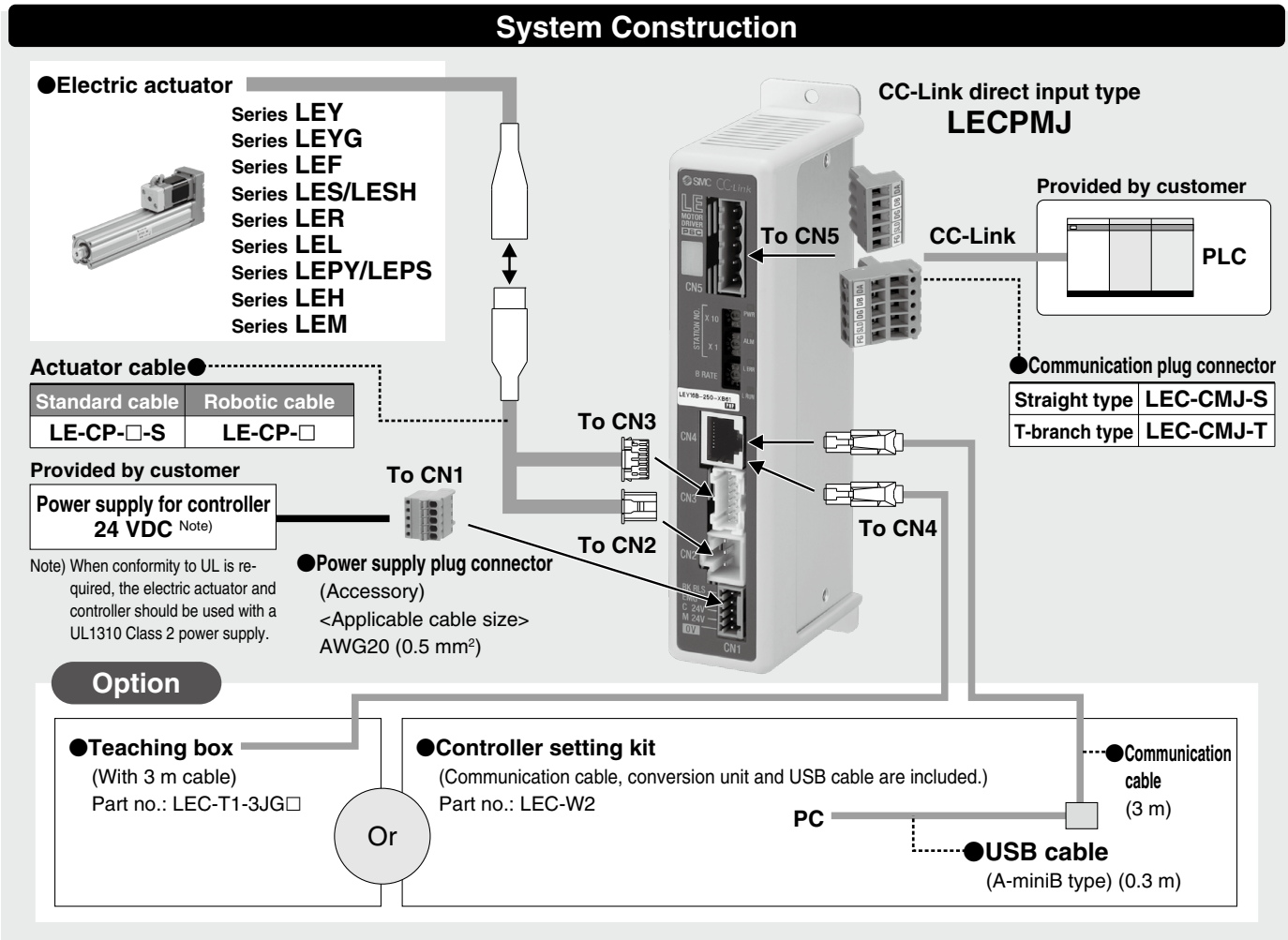

SMC Corporation
Akihabara UDX 15F,
4-14-1, Sotokanda, Chiyoda-ku, Tokyo 101-0021, JAPAN
Phone: 03-5207-8249 Fax: 03-5298-5362
http://www.smcworld.com
© 2013 SMC Corporation All Rights Reserved

Specifications are subject to change without prior notice
and any obligation on the part of the manufacturer.