NTC THERMISTORS:
HIGH TEMPERATURE THERMISTORS

Keystone Thermometrics high-temperature thermistors are designed specifically for temperature measurement and control applications ranging from 200°C to 1000°C. The HT-300 is well-suited for appliances such as self-cleaning ovens. The HT-600 is especially useful for monitoring exhaust gas temperatures in automotive and aircraft applications.

Type	Temp. Range (°C)	T_0 (°C)	R @ T_0 (Ω)±30%	α @ T_0 (%/°C)	Housing	Leads
HT300-60K-S1	200 to 600	300	60K	–3.6	Inconel	Chromel
HT600-40K-S1	300 to 1000	600	40K	–1.7	Inconel	Platinum

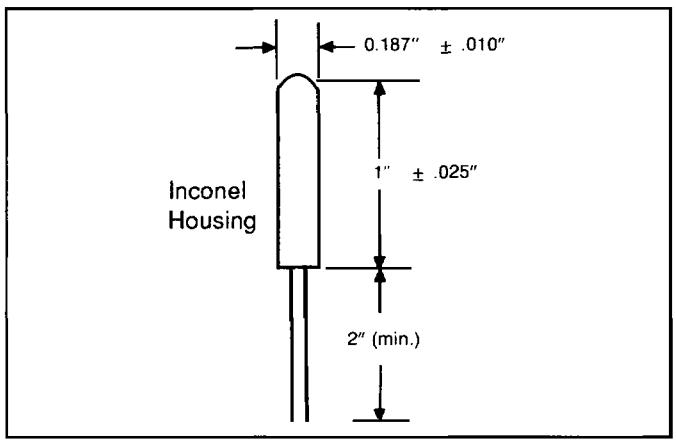

T (°C)	R/T Characteristics (Ω)	
	HT-300	HT-600
200	2.0 Meg	
300	60.0 K	
400	3.8 K	2.5 Meg
500	450 Ω	250.0 K
600	130 Ω	40.0 K
700		7.0 K
800		1.9 K
900		720 Ω
1000		340 Ω

NTC THERMISTORS:
CRYOGENIC THERMISTORS

Type	For Operation In Liquid	Resistance (Ω)	Temperature Coefficient (%/°K)	Figure	Dissipation Constant (mW/°K)
RL1004-10K-0-S1	Oxygen	10K ± 20%	– 8.4	1	4
	Nitrogen	31.5K Nominal	–10.4		
RL060628-31.7K-0-S1	Oxygen	31.7K ± 20%	– 8.4	2	3
	Nitrogen	100K Nominal	–10.4		

NOTE: Dissipation constant is in still air (mW/°K)

Keystone Thermometrics cryogenic thermistors are extremely useful for liquid level detection in various cryogenic liquids. In this application, the thermistor is slightly self-heated by passing a small current through the unit. The heat generated in the unit is more easily dissipated when the thermistor is immersed in cryogenic fluid than when the fluid level falls below the thermistor. The resulting change in thermistor temperature is easily detected by the change in resistance.

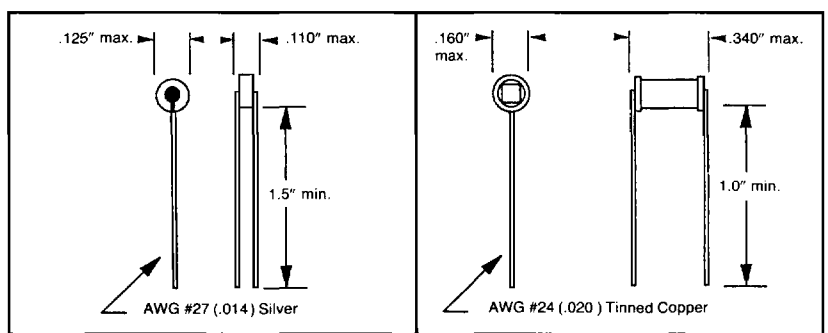

FIG. 1 FIG. 2

KEYSTONE THERMOMETRICS

967 WINDFALL ROAD • ST. MARYS • PENNSYLVANIA • 15857-3397 • TEL: (814) 834-9140 • FAX: (814) 781-7969