International Components Corporation

215 McCormick Drive, Bohemia, NY 11716
631-952-9595 • Fax: 631-952-9597
www.icc107.com

SPECIFICATIONS SHEET

PRODUCT TYPE : *MECHANICAL BUZZER*

PRODUCT SERIES : *BR2618L*

DESCRIPTION : *MC BUZZER SINGLE 6VDC L/W ABS SP RoHS*

COLOR : *WHITE*

ELECTRICAL SPECIFICATIONS

	MODEL NO.		*BR2618L-06*
	OPERATING VOLTAGE RANGE	(VDC)	4.0 ~ 8.0
	RATED VOLTAGE	(VDC)	6.0
*	*MAX. RATED CURRENT*	(mA)	33.0
*	*MIN. SOUND OUTPUT*	(dBA / 10 cm)	95.0
*	*FREQUENCY*	(Hz)	400 ± 100
	TONE NATURE		SINGLE
	OPERATING TEMPERATURE	(° C)	-20 ~ +60
	TERMINAL		LEADWIRE
	HOUSING MATERIAL		ABS
	WEIGHT	(g)	17.0

* Value applying at rated voltage

DIMENSIONS **UNIT :** mm

TOP VIEW

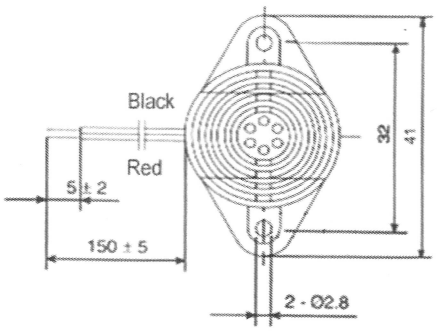

SIDE VIEW

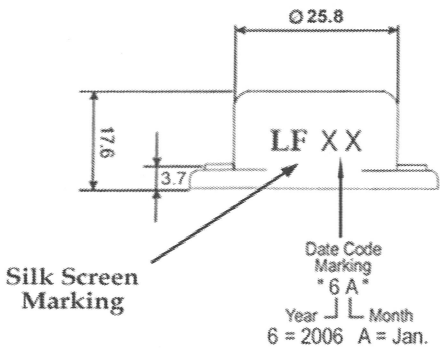

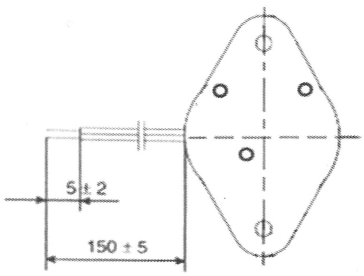

BOTTOM VIEW

Modify :	Date :	By :
	Ref.	2-001

Approved By : FG
Date : 6-Jan.-2006

Prepared By : LL
Date : 6-Jan.-2006