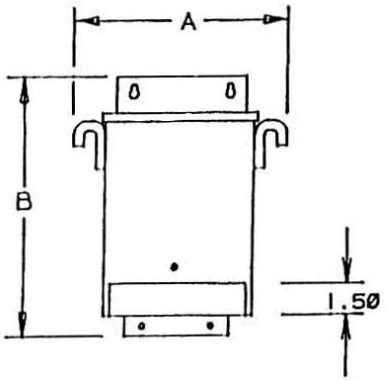

FRONT

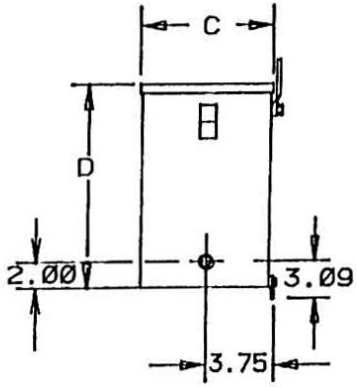

SIDE

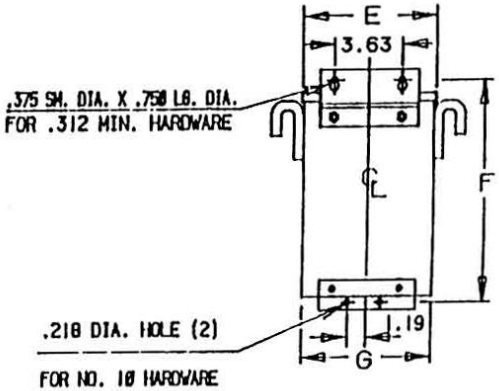

BACK

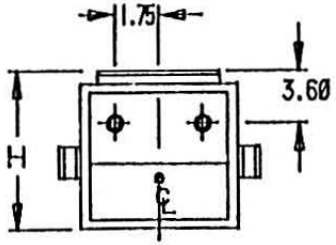

BOTTOM

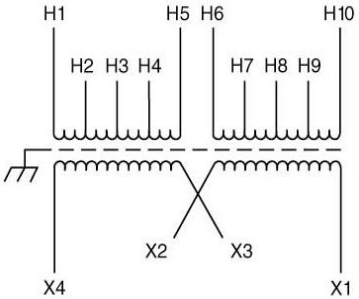

Primary Volts	Connect Primary Lines To	Inter-Connect	Connect Secondary Lines To
190	H1& H7	H1 to H6 H2 to H7	
208	H1 & H8	H1 to H6 H3 to H8	
220	H1 & H9	H1 to H6 H4 to H9	
240	H1& H10	H1 to H6 H5 to H10	
380	H1 & H7	H2 to H6	
416	H1 & H8	H3 to H6	
440	H1 & H9	H4 to H6	
480	H1 & H10	H5 to H6	
Secondary Volts			
240		X2 to X3	X1 - X4
120/240		X2 to X3	X1- X2 - X4
120		X1 to X3 X2 to X4	X1 - X4

KVA	CATALOG NUMBER	VOLTAGE		WIRING DIAGRAM	WEIGHT	PHASE	FREQ.
		HIGH	LOW				
3.0	**TF-2-79262-S**	190/208/220/240 380/416/440/480	120/240		55 Lbs	1ϕ	50/60 Hz

TYPICAL PERFORMANCE DATA

Winding Rise	115°C
Insulation	180°C
Sound Level	40 dB

Standards:	UL/CSA/CE

IMPEDANCE	3.47%

Typical Efficiency	
Full Load Losses	
No Load Losses	

Enclosure: NEMA-3R

A	B	C	D	E	F	G	H		
10.31	12.50	6.65	10.19	7.81	11.50	7.68	7.13		

Revisions

ACME ELECTRIC

File No.

UL – E79947

CSA - 7357

					A	PRINTS TO	**CONTROL 7**