Based on a powerful built-in microcomputer, the compact 366 is the most versatile and cost-effective counter ATC has ever built. No industrial counter has ever achieved a higher level of reliability and ruggedness than the 366. It has no moving parts in its electronic logic circuits, only plug-in circuit boards which are computer-tested for reliability and assembled virtually without hand wiring. Its few mechanical components have been selected for reliable service; long life relays with heavy-duty contacts and rotary set point selector switches with extremely low wear characteristics.

CONTACT BOUNCE AND NOISE IMMUNITY: No industrial counter offers greater immunity to noise and contact bounce than the 366. Most noise encountered in typical industrial environments is blocked by such design features as full-wave bridges and a transformer power supply... so effectively that the 366 does not have to be shielded. Furthermore the 366's microcomputer employs redundant sampling logic to detect and reject any noise pulse that manages to penetrate its defenses. Through the same powerful technique, the microcomputer also detects and rejects even severe contact bounce. As a result, the 366 maintains absolute count accuracy and is virtually immune to false starts and reset, even in difficult industrial environments.

COMPUTATION: Through its internal microcomputer, the 366 keeps track of the set point throughout the count cycle. Whenever there is a change in set point, even during a cycle, it instantly recomputes the remaining count and accurately determines the number of counts before count-out. This unique capability is especially valuable in the count-down modes as it allows you to shorten or lengthen a cycle without loss of accuracy.

PROGRAMMABLE DISPLAY: The 366's three-digit cycle progress display will count UP to or DOWN from the set point, depending on the position of an internal jumper. After count-out, the display will either STOP or GO. In the UP & GO program, the display counts up to the set point and continues to count after count-out; in the DOWN & GO mode, it counts down to the set point, then begins to count up (from zero) after count-out.

WIDE RANGE: Each 366 Long-Ranger covers the overall span of 1 to 99,900 counts in three switch-selected ranges of 1 to 999, 10 to 9990 or 12 to 99,900. It can be optimized within any selected range simply by removing appropriate selector knobs (e.g. with the counter in the 1 to 999 range, you can obtain a tamper-proof span of 1 to 99 by setting the left selector at 0 and removing the knob.) To the right of the three-digit display, a counting bar (▬) blinks on each time a pulse is received. At left, a marker (▼) turns on when the delayed relay is energized at count-out.

SELF-DIAGNOSTICS: A built-in diagnostic program lets you verify—without using any test instrument--that the counter's functional circuits are operating properly. Just follow the instructions on the flip-up card, using the counter's own display for the test readout. If all self-test displays are correct, any malfunction is almost certainly due to external circuits or to the relays, not the counter.

COMPACT, PLUG-IN AND DUST-TIGHT: Packaged in a 72mm² DIN housing, the 366 occupies 40% less panel space than most other industrial counters. It is a true plug-in counter that can be replaced in seconds without disturbing housing or wiring. The 366 is also fully gasketed and O ring sealed to be dust and water-tight whether panel or surface-mounted.

POSITIVE RESET TIME AND PULSE LENGTH: Digitally clocked by the microcomputer, the 366's reset time is consistently of the same duration, regardless of variations in line voltage, power supply or cycle length. When the 366 operates in repeat-cycle mode, the output pulse is also digitally clocked so that both the time of occurrence and its duration are consistent from cycle to cycle.

Long-Ranger Computing Counter

DIMENSIONS (INCHES/MILLIMETERS)

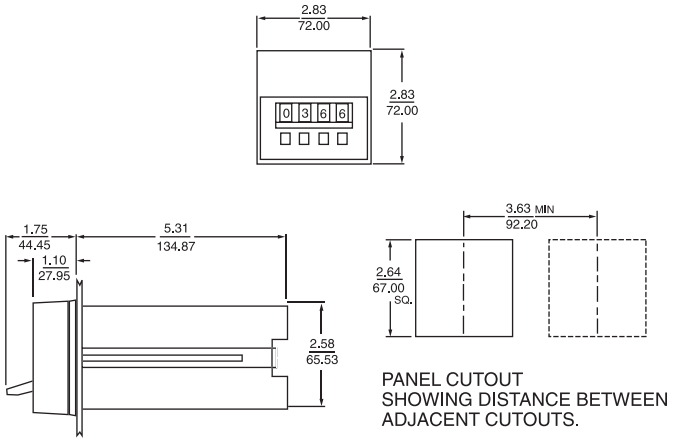

PANEL CUTOUT
SHOWING DISTANCE BETWEEN
ADJACENT CUTOUTS.

WIRING

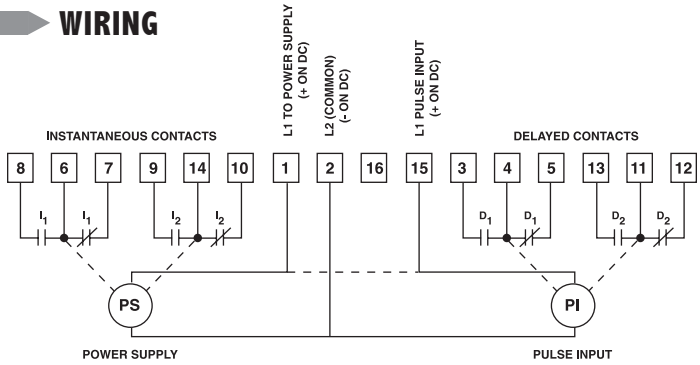

TERMINAL WIRING:
INDICATING MODEL

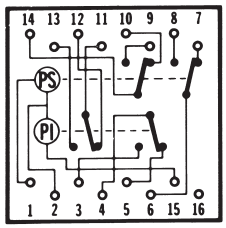

The 366C Directly Replaces 366B & 366A.

TYPICAL INSTALLATIONS

- (PS) POWER SUPPLY
- (PI) PULSE INPUT
- ○ INDEPENDENT LOADS
- ● DEPENDENT LOADS
- MOMENTARY STARTING CONTACT
- SUSTAINED STARTING CONTACT
- NORMALLY CLOSED RESET CONTACT
- O LOAD DE-ENERGIZED
- X LOAD ENERGIZED

DELAYED CONTACTS

Contacts transfer simultaneously when unit "times out" and all digits are zero.

All timers shown in "before start" position. Diagrams shown with power off unless otherwise marked.

Maximum load current through any load carrying contact is 5 amperes.

Pilot light leads are brought out to terminal block. Pilot light can be wired to show practically any desired function; unit energized, cycle running, instantaneous or delayed switch closed, etc.

ON DELAY—Reset on power failure.

INSTANTANEOUS CONTACTS

Contacts are transferred when power supply is energized; transferred back, as shown when de-energized.

SUSTAINED START

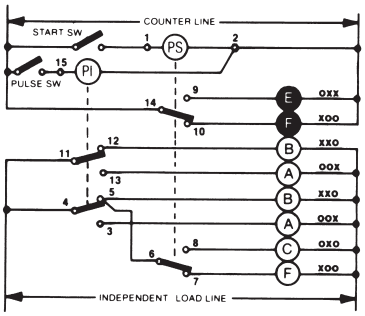

MOMENTARY START/SUSTAINED START

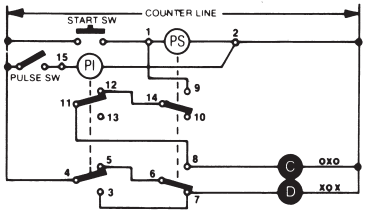

COUNT, PULSE AND REPEAT CYCLE

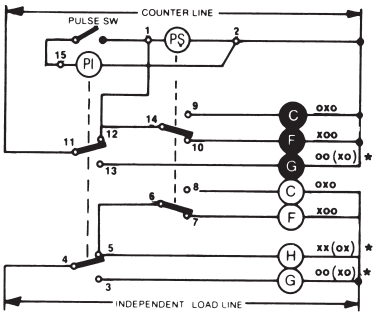

NOTE: **Minimum sw open time: 100** mSEC
Minimum sw close time: 20 mSEC
Output Pulse length — approx. 50 mSEC

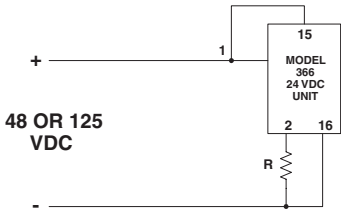

VDC	R	ATC PART NUMBER
48	150 ohm 20 w	3652602500
125	650 ohm 20 w	3652602600

MODEL NUMBER

MODEL NUMBER	366C			P	X
RANGE 1-999, 10-9990 or 12-99900 (switch selected)	400				
Special	000				
VOLTAGE & FREQUENCY					
120 VAC 50-60 Hz		Q			
240 VAC, 50-60 Hz		R			
24 VAC, 50 or 60 Hz		T			
24 VDC		N			
Special		K			
ARRANGEMENT					
Selectable Count Up or Count Down with Display			30		
Selectable Count Up & Go or Count Down & Go with Display			50		
FEATURES					
Basic plug-in unit				P	
Standard unit					X

ACCESSORIES

Surface mounting bracket kit	0353-260-27-00
Retrofit kit	0305-265-61-70

OPERATION

As soon as power is applied to terminals 1 & 2 of the counter, the instantaneous relay is energized and changes the states of its associated contacts (8-6-7 & 9-14-10). The counter then looks for terminal 15 (pulse input terminal) to receive input pulses. When the number of pulses received equals the number of counts set on the front face, the delayed relay energize and changes the states of its associated contacts (3-4-5 & 13-11-12).

The counter is reset by removing power from terminal 1 for at least 60 msec. At reset, both relays revert back to their shelf (without power) state. To the right you will find some typical applications.

SETTING SWITCHES: The three digits are set with the rotary switch knobs beneath each digit. These knobs can be rotated in either direction (CW or CCW), and they are "pull" removable if digit set security is desired. When the 366 is in the "Count Down" mode, changing one or more digits, during counting, will instantly be reflected by an equivalent change in the counter's display. In the "Count Up" mode, changing digits immediately changes the count-out set point. Setting all three digits to zero will cause instant count-out in any display mode.

THE DISPLAY: A high intensity blue fluorescent display consists of three digits and a Counting Bar with a special Count-Out symbol. The Counting Bar appears to the right of the digits and blinks once every count, regardless of range. When the delay relay is energized at count-out, a triangular Count-Out symbol appears to the left of the digits.

REMOVE THE 366C FROM ITS HOUSING TO MAKE CHANGES SHOWN BELOW.

COUNTING DISPLAY MODES: Down & Stop (30)
Up & Stop (30)
Down & Go (50)
Up & Go (50)

CHANGING THE RANGE: The 366B has three ranges:
x1 = Counts single pulses to 999
x10 = Counts every tenth pulse to 9,990
12 = Counts every 12th pulse

Each range is selected using finger force on the white plastic lever behind the front face of the counter. In two of the three possible lever positions, an indicator will appear in a range window located on the front face below and between the rotary switch knobs. When nothing appears in these windows, the counter is understood to be in the x 1 range.

SPECIFICATIONS

MODELS	Display model only for operation at 120, 240 or 24 VAC; and 24 VDC. Unit counts on break (i.e. when count input switch opens). Unit operates in on delay mode only.	
RANGE	Switch-selectable ranges of 1 to 999, 10 to 9990, and 12 to 99900.	
REPEAT ACCURACY	100% (+0 count on all ranges)	
RESET TIME	Clocked at 40 mSEC	
COUNT INPUT		AC
	Max. count rate (symmetrical input)	1000/MIN
	Min. pulse on time	20 mSEC
	Min. pulse off time	30 mSEC
		DC
	Max. count rate (symmetrical input)	2000/MIN
	Min. Pulse on time	15 mSEC
	Min. Pulse off time	15 mSEC
	Bounce Immunity (max. bounce open time)	5 mSEC
	Pulse Contact Requirement	10 mA at line voltage
COUNT CONTROL MODES	Single Cycle	interval or delayed
	Repeat Cycle	pulse (occurrence and duration 50 mSEC clocked)
DISPLAY	Cycle Progress	3-digit display, 0.3 inch, high-intensity, blue programmable modes: DOWN & STOP, DOWN & GO, UP & STOP or UP & GO.
	Count-Out	▼ display; energized at count-out
	Counting Bar	display; blinks on when count switch is closed, when pulse is received
HOUSING	72mm² DIN size; plug-in design; fully gasketed, dust and water-tight in panel mounted installations. NEMA 4 when mounted per installation instructions.	
TERMINALS	16 screw terminals accessible at rear; integral wiring diagram.	

COUNT INPUT	Voltage Model	
	120 VAC Model	Turn On 60V 3.5 mA (nom.) Turn Off 30V 2.4 mA (nom.) 10 mA max. current at 120V
	240 VAC Model	Turn On 120V 3.5 mA (nom.) Turn Off 60V 2.4 mA (nom.) 10 mA max. current at 240V
	24 VAC Model	Turn On 12V 9.5mA (nom.) Turn Off 4V 3.8 mA (nom.) 30 mA max. current at 24V
	24 VDC Model	Turn On 15 VDC 2.5 mA (nom.) Turn Off 3 VDC .5 mA (nom.) 5 mA max. current at 24V
LOAD RELAY	Number	one instantaneous and one delayed
	Type	DPDT, Form C
	Operate	Time 13 ms, max.
	Release Time	Time 10 ms, max.
	Contact Ratings	7A at 120, 240 or 24 VAC, 1/6 HP. 3A at 24 VDC, 1.5A at 48 VDC, 0.5A at 125 VDC.
	LIFE	100 million operations (no load)
POWER	120V	95 to 132V, 50/60 Hz inrush–0.3A running–0.06A at 120 VAC
	240V	190 to 264V, 50/60 Hz inrush–0.15A running–0.03A at 240 VAC
	24 VAC	19.2 - 26.4 VAC, 50 or 60 Hz Inrush–1 A Running–0.25 A at 24 VAC
	24 VDC	19.2 - 26.4 VDC, 5% ripple Running - .120 A at 24 VDC
TEMPERATURE RATING	32 to 122°F (0 to 50°C)	
MOUNTING	Standard	hardware is provided for front-of-panel mounting.
	Optional	Surface-mounting brackets with front-facing terminals
	NEMA 12 molded case (1 counter)	
	NEMA 1 steel case (2 counters)	
WEIGHT	NET: AC - 1 lb., 6oz. DC - 10 oz.	
	SHIPPING: AC - 2 lbs., DC - 1 lb., 4 oz.	