ELECTROSWITCH
•ELECTRONIC PRODUCTS
UNIT OF ELECTRO SWITCH CORP.

Type C16-32

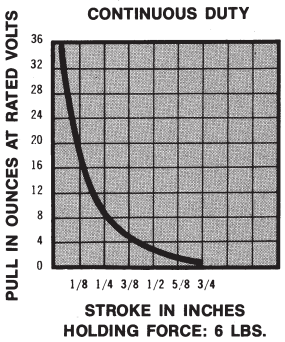

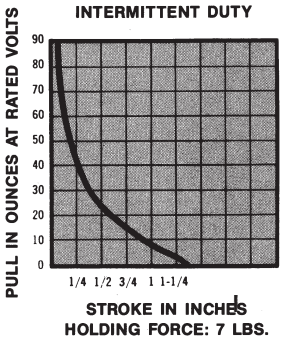

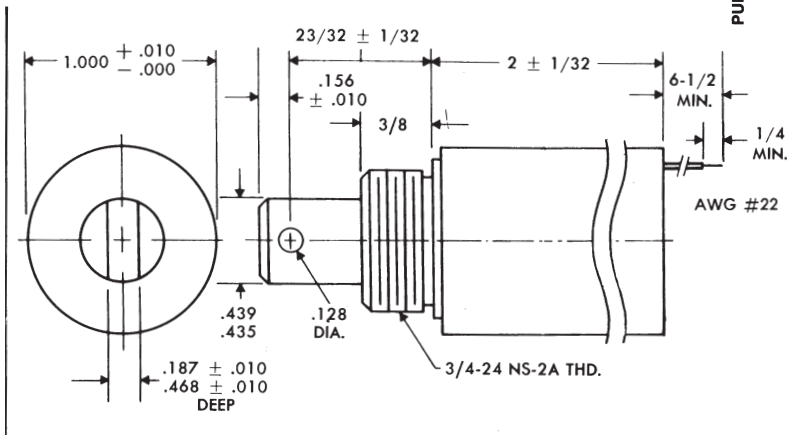

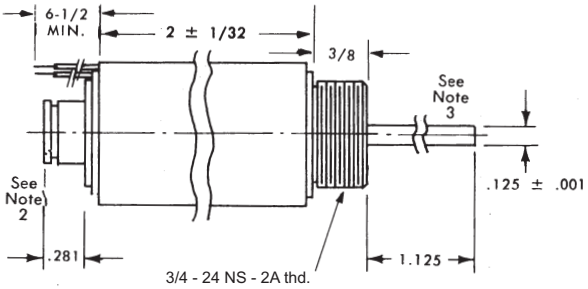

Notes:

1. Solenoid shown in energized position.
2. Weight is 5.5 ozs.
3. Largest size thread that may be threaded on push rod #5.
4. Push force approximately 90% of pull forces shown.

Type C16-32

Specifications	
Size	1″ Diameter x 2″ Long (From Mounting Surface)
Weight	5½ Oz. Max.
Mounting	¾-24 Threaded Bushing (Nut and Lockwasher Supplied)
Dielectric Strength	500 VRMS
Insulation Material	Class "A" (105° C)
Life Expectancy	10 Million Cycles at Rated Load
Nominal Coil Power	Continuous Duty—5.5 Watts Intermittent Duty (10%)—38 Watts (One Minute Max. on Time)

Standard Coils		
Nominal Volts (D.C.)	**Resistance (OHMS ± 10%) at 25°C**	
	Continuous Duty	**Intermittent Duty**
6	6.5	.95
12	26.0	3.80
24	105.0	15.00
110	2405	348.0
Other Coils and Duty Cycles Available Upon Request		

Catalog Number	Electroswitch P/N	Voltage	Duty Cycle	Coil Power (Watts)	Pull (Ounces)				Weight (Ounces)
					0.125	0.250	0.500	0.75	
C16-32C24DC-AY	4-6318-513	24	cont.	5.5	20.0	8.0	3.0	1.0	5.5
C16-321024DC-AY	4-6318-503	24	10%	38.0	65.0	40.0	23.0	13.0	5.5
C16-32C12DC-AY	4-6318-512	12	cont.	5.5	20.0	8.0	3.0	1.0	5.5
C16-321012DC-AY	4-6318-502	12	10%	38.0	65.0	40.0	23.0	13.0	5.5