I/O MODULES
QUAD
DC OUTPUT

OPTO 22

DATA SHEET

Form 488-070924

Part Numbers	Description
ODC5Q	4-Channel DC Output 5–60 VDC, 5 VDC Logic
ODC5AQ	4-Channel DC Output 5–200 VDC, 5 VDC Logic

Description

Quad Pak modules contain the equivalent of four single channel I/O circuits in a single high-density package. Each Quad Pak module is divided into two pairs of channels with each pair sharing a common connection. The Quad Pak modules are designed to plug into the Quad Pak high-density I/O mounting racks only and cannot be plugged into single channel racks. Quad Pak modules are designed to work with a 5 VDC logic voltage only and can be used with Optomux, Pamux, and Mistic protocol brain boards and mounting racks as well as racks using a direct cable connection to a computer.

DC output modules are used for controlling or switching DC loads. Each module provides up to 4,000 V_{rms} of optical isolation between the field devices and the control logic.

Typical uses and applications for DC output modules include switching the following loads:

- DC Relays
- DC Solenoids
- DC Motor Starters
- DC Lamps or Indicators

All Quad Pak DC outputs are current sourcing outputs. The module connection to the load is the positive connection.

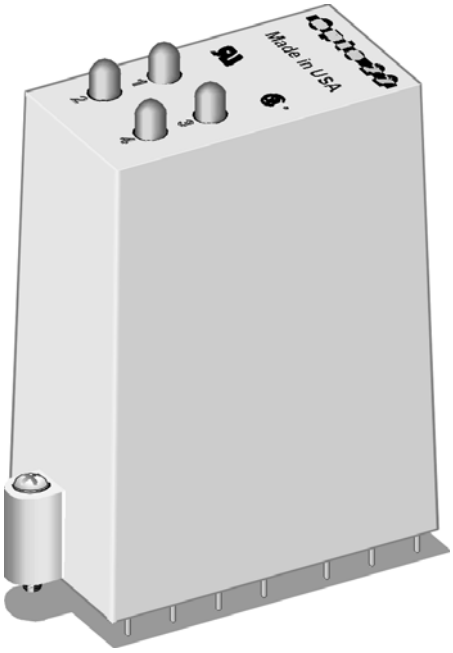

Specifications

	Units	ODC5Q	ODC5AQ
Line Voltage - Maximum	VDC	60	200
Operating Voltage Range	VDC	5–60	5–200
Current Rating (each channel) @ 20° C Ambient @ 45° C Ambient @ 70° C Ambient	 Amps Amps Amps	 3 2 1	 1 1 0.55
Off-state Leakage @ Maximum Voltage	mA	1	2
Logic Voltage - Nominal	VDC	5	5
Logic Voltage Range (Vcc)	VDC	4–8	4–8
Logic Pickup Voltage	VDC	4.0	4.0
Logic Dropout Voltage	VDC	2.3	2.3
Logic Input Current @ Nominal Logic Voltage	mA	12	12
Control Resistance	Ohms	220	220
One-Second Surge	Amps	5	5
Operating Ambient Temperature	°C	-30 to 70	-30 to 70
Isolation Input-to-Output	Vrms	4,000	4,000
Turn-on Time	µs	100	100
Turn-off Time	µs	750	750
Output Voltage Drop Maximum	Volts	1.6	1.6

Dimensions

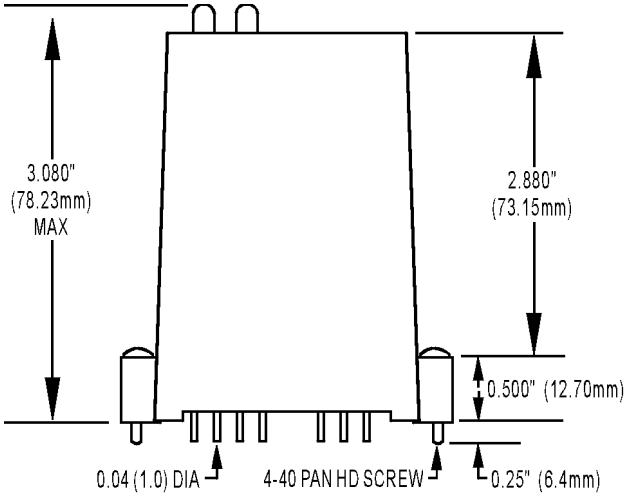

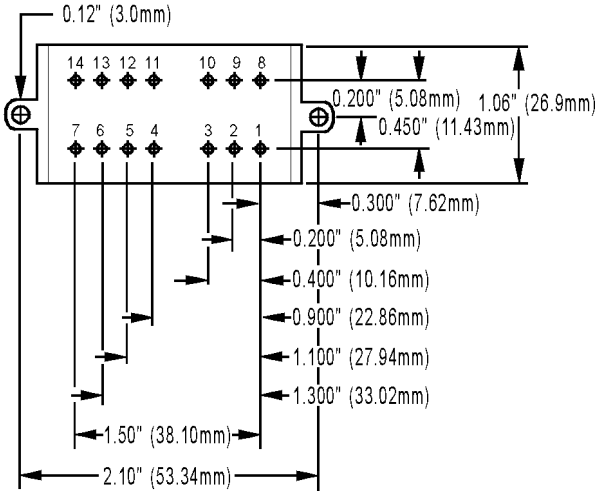

Schematics

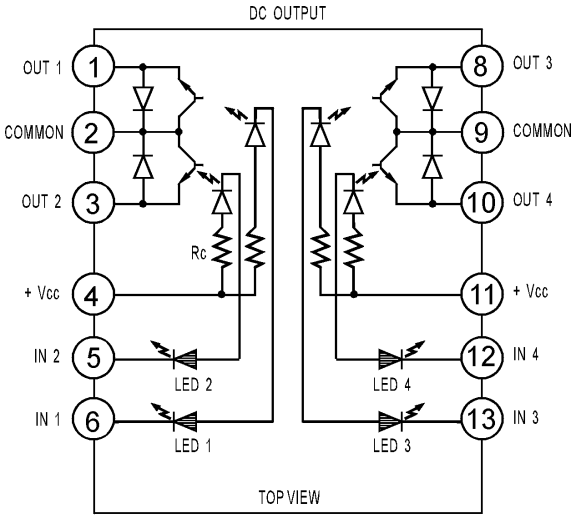

RED INDICATOR LED

INFRARED COUPLER LED

EQUIVALENT CIRCUIT ONLY

NEGATIVE TRUE LOGIC

INDUCTIVE LOADS MUST BE
DIODE SUPPRESSED