Schottky Rectifier, 2 x 30 A

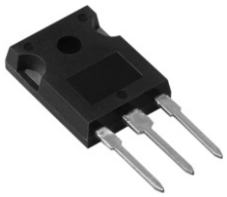

TO-247AC

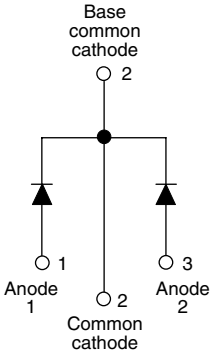

FEATURES

- 150 °C T_J operation
- Center tap TO-247 package
- Very low forward voltage drop
- High frequency operation
- High purity, high temperature epoxy encapsulation for enhanced mechanical strength and moisture resistance
- Guard ring for enhanced ruggedness and long term reliability
- Designed and qualified for industrial level

DESCRIPTION

The MBR6045WT center tap Schottky rectifier has been optimized for very low forward voltage drop, with moderate leakage. The proprietary barrier technology allows for reliable operation up to 150 °C junction temperature. Typical applications are in switching power supplies, converters, freewheeling diodes, and reverse battery protection.

PRODUCT SUMMARY	
$I_{F(AV)}$	2 x 30 A
V_R	45 V

MAJOR RATINGS AND CHARACTERISTICS			
SYMBOL	CHARACTERISTICS	VALUES	UNITS
$I_{F(AV)}$	Rectangular waveform	60	A
V_{RRM}		45	V
I_{FSM}	t_p = 5 µs sine	2900	A
V_F	30 Apk, T_J = 125 °C (per leg)	0.55	V
T_J		- 55 to 150	°C

VOLTAGE RATINGS			
PARAMETER	SYMBOL	MBR6045WT	UNITS
Maximum DC reverse voltage	V_R	45	V
Maximum working peak reverse voltage	V_{RWM}		

ABSOLUTE MAXIMUM RATINGS						
PARAMETER		SYMBOL	TEST CONDITIONS		VALUES	UNITS
Maximum average forward current See fig. 5	per leg	$I_{F(AV)}$	50 % duty cycle at T_C = 122 °C, rectangular waveform		30	A
	per device				60	
Maximum peak one cycle non-repetitive surge current per leg See fig. 7		I_{FSM}	5 µs sine or 3 µs rect. pulse	Following any rated load condition and with rated V_{RRM} applied	2900	
			10 ms sine or 6 ms rect. pulse		360	
Non-repetitive avalanche energy per leg		E_{AS}	T_J = 25 °C, I_{AS} = 4 A, L = 3.4 mH		27	mJ
Repetitive avalanche current per leg		I_{AR}	Current decaying linearly to zero in 1 µs Frequency limited by T_J maximum V_A = 1.5 x V_R typical		6	A

ELECTRICAL SPECIFICATIONS					
PARAMETER	SYMBOL	TEST CONDITIONS		VALUES	UNITS
Maximum forward voltage drop per leg See fig. 1	V_{FM} (1)	30 A	T_J = 25 °C	0.62	V
		60 A		0.75	
		30 A	T_J = 125 °C	0.55	
Maximum reverse leakage current per leg See fig. 2	I_{RM} (1)	T_J = 25 °C	V_R = Rated V_R	1	mA
		T_J = 125 °C		150	
Threshold voltage	$V_{F(TO)}$	T_J = T_J maximum		0.27	V
Forward slope resistance	r_t			7.3	mΩ
Maximum junction capacitance per leg	C_T	V_R = 5 V_{DC} (test signal range 100 kHz to 1 MHz) 25 °C		1400	pF
Typical series inductance per leg	L_S	Measured lead to lead 5 mm from package body		7.5	nH
Maximum voltage rate of change	dV/dt	Rated V_R		10 000	V/µs

Note

(1) Pulse width < 300 µs, duty cycle < 2 %

THERMAL - MECHANICAL SPECIFICATIONS					
PARAMETER		SYMBOL	TEST CONDITIONS	VALUES	UNITS
Maximum junction and storage temperature range		T_J, T_{Stg}		- 55 to 150	°C
Maximum thermal resistance, junction to case per leg		R_{thJC}	DC operation See fig. 4	1.0	°C/W
Maximum thermal resistance, junction to case per package			DC operation	0.5	
Typical thermal resistance, case to heatsink		R_{thCS}	Mounting surface, smooth and greased	0.24	
Approximate weight				6	g
				0.21	oz.
Mounting torque	minimum			6 (5)	kgf · cm (lbf · in)
	maximum			12 (10)	
Marking device			Case style TO-247AC (JEDEC)	MBR6045WT	

ORDERING INFORMATION TABLE

Device code	MBR	60	45	WT	-
	1	2	3	4	5

1 - Schottky MBR series

2 - Current rating (60 = 60 A)

3 - Voltage rating (45 = 45 V)

4 - Circuit configuration:
Center tap (dual) TO-247

5 -
- None = Standard production
- PbF = Lead (Pb)-free

TO-247

DIMENSIONS in millimeters and inches

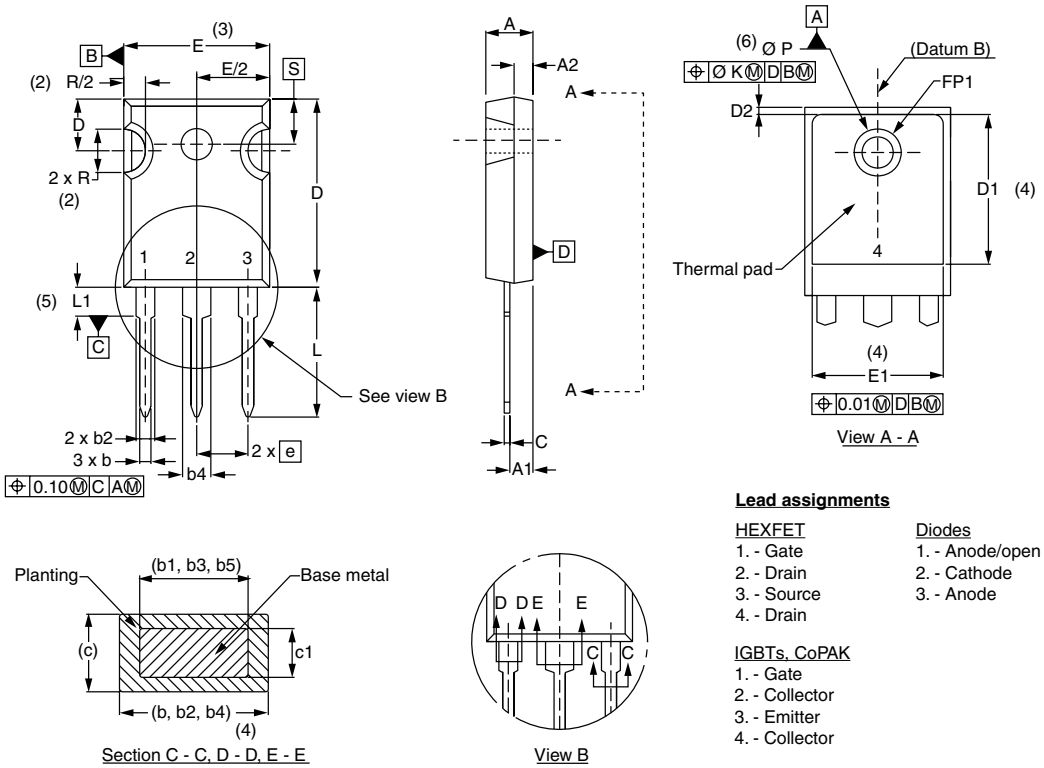

Lead assignments

HEXFET
1. - Gate
2. - Drain
3. - Source
4. - Drain

Diodes
1. - Anode/open
2. - Cathode
3. - Anode

IGBTs, CoPAK
1. - Gate
2. - Collector
3. - Emitter
4. - Collector

SYMBOL	MILLIMETERS		INCHES		NOTES
	MIN.	MAX.	MIN.	MAX.	
A	4.65	5.31	0.183	0.209	
A1	2.21	2.59	0.087	0.102	
A2	1.50	2.49	0.059	0.098	
b	0.99	1.40	0.039	0.055	
b1	0.99	1.35	0.039	0.053	
b2	1.65	2.39	0.065	0.094	
b3	1.65	2.37	0.065	0.094	
b4	2.59	3.43	0.102	0.135	
b5	2.59	3.38	0.102	0.133	
c	0.38	0.86	0.015	0.034	
c1	0.38	0.76	0.015	0.030	
D	19.71	20.70	0.776	0.815	3
D1	13.08	-	0.515	-	4

SYMBOL	MILLIMETERS		INCHES		NOTES
	MIN.	MAX.	MIN.	MAX.	
D2	0.51	1.30	0.020	0.051	
E	15.29	15.87	0.602	0.625	3
E1	13.72	-	0.540	-	
e	5.46 BSC		0.215 BSC		
FK	2.54		0.010		
L	14.20	16.10	0.559	0.634	
L1	3.71	4.29	0.146	0.169	
N	7.62 BSC		3		
FP	3.56	3.66	0.14	0.144	
FP1	-	6.98	-	0.275	
Q	5.31	5.69	0.209	0.224	
R	0.452	5.49	0.178	0.216	
S	5.51 BSC		0.217 BSC		

Notes

(1) Dimensioning and tolerancing per ASME Y14.5M-1994
(2) Contour of slot optional
(3) Dimension D and E do not include mold flash. Mold flash shall not exceed 0.127 mm (0.005") per side. These dimensions are measured at the outermost extremes of the plastic body
(4) Thermal pad contour optional with dimensions D1 and E1
(5) Lead finish uncontrolled in L1
(6) Ø P to have a maximum draft angle of 1.5 to the top of the part with a maximum hole diameter of 3.91 mm (0.154")
(7) Outline conforms to JEDEC outline TO-247 with exception of dimension c