# Schottky Rectifier, 2 x 30 A

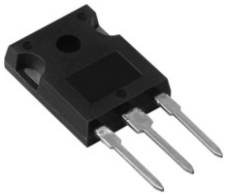

TO-247AC

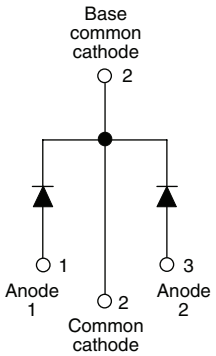


## FEATURES

- 175 °C $T_J$ operation
- Center tap TO-247 package
- Low forward voltage drop
- High frequency operation
- High purity, high temperature epoxy encapsulation for enhanced mechanical strength and moisture resistance
- Guard ring for enhanced ruggedness and long term reliability
- Lead (Pb)-free ("PbF" suffix)
- Designed and qualified for industrial level

Pb-free Available

RoHS* COMPLIANT

## DESCRIPTION

The 63CPQ100PbF center tap Schottky rectifier series has been optimized for low reverse leakage at high temperature. The proprietary barrier technology allows for reliable operation up to 175 °C junction temperature. Typical applications are in switching power supplies, converters, freewheeling diodes, and reverse battery protection.

| PRODUCT SUMMARY | |
|---|---|
| $I_{F(AV)}$ | 2 x 30 A |
| $V_R$ | 100 V |

| MAJOR RATINGS AND CHARACTERISTICS | | | |
|---|---|---|---|
| SYMBOL | CHARACTERISTICS | VALUES | UNITS |
| $I_{F(AV)}$ | Rectangular waveform | 60 | A |
| $V_{RRM}$ | | 100 | V |
| $I_{FSM}$ | $t_p$ = 5 µs sine | 2200 | A |
| $V_F$ | 30 Apk, $T_J$ = 125 °C (per leg) | 0.64 | V |
| $T_J$ | Range | - 55 to 175 | °C |

| VOLTAGE RATINGS | | | |
|---|---|---|---|
| PARAMETER | SYMBOL | 63CPQ100PbF | UNITS |
| Maximum DC reverse voltage | $V_R$ | 100 | V |
| Maximum working peak reverse voltage | $V_{RWM}$ | | |

| ABSOLUTE MAXIMUM RATINGS | | | | | |
|---|---|---|---|---|---|
| PARAMETER | | SYMBOL | TEST CONDITIONS | VALUES | UNITS |
| Maximum average forward current See fig. 5 | per leg | $I_{F(AV)}$ | 50 % duty cycle at $T_C$ = 153 °C, rectangular waveform | 30 | A |
| | per device | | | 60 | |
| Maximum peak one cycle non-repetitive surge current per leg See fig. 7 | | $I_{FSM}$ | 5 µs sine or 3 µs rect. pulse; Following any rated load condition and with rated $V_{RRM}$ applied | 2200 | |
| | | | 10 ms sine or 6 ms rect. pulse | 410 | |
| Non-repetitive avalanche energy per leg | | $E_{AS}$ | $T_J$ = 25 °C, $I_{AS}$ = 1 A, L = 30 mH | 15 | mJ |
| Repetitive avalanche current per leg | | $I_{AR}$ | Current decaying linearly to zero in 1 µs Frequency limited by $T_J$ maximum $V_A$ = 1.5 x $V_R$ typical | 1 | A |

* Pb containing terminations are not RoHS compliant, exemptions may apply

| ELECTRICAL SPECIFICATIONS | | | | | |
|---|---|---|---|---|---|
| PARAMETER | SYMBOL | TEST CONDITIONS | | VALUES | UNITS |
| Maximum forward voltage drop per leg See fig. 1 | $V_{FM}$ (1) | 30 A | $T_J$ = 25 °C | 0.77 | V |
| | | 60 A | | 0.92 | |
| | | 30 A | $T_J$ = 125 °C | 0.64 | |
| | | 60 A | | 0.76 | |
| Maximum reverse leakage current per leg See fig. 2 | $I_{RM}$ (1) | $T_J$ = 25 °C | $V_R$ = Rated $V_R$ | 0.3 | mA |
| | | $T_J$ = 125 °C | | 25 | |
| Threshold voltage | $V_{F(TO)}$ | $T_J$ = $T_J$ maximum | | 0.38 | V |
| Forward slope resistance | $r_t$ | | | 5.75 | mΩ |
| Maximum junction capacitance per leg | $C_T$ | $V_R$ = 5 $V_{DC}$ (test signal range 100 kHz to 1 MHz) 25 °C | | 1300 | pF |
| Typical series inductance per leg | $L_S$ | Measured lead to lead 5 mm from package body | | 7.5 | nH |
| Maximum voltage rate of change | dV/dt | Rated $V_R$ | | 10 000 | V/µs |

**Note**

(1) Pulse width < 300 µs, duty cycle < 2 %

| THERMAL - MECHANICAL SPECIFICATIONS | | | | |
|---|---|---|---|---|
| PARAMETER | SYMBOL | TEST CONDITIONS | VALUES | UNITS |
| Maximum junction and storage temperature range | $T_J$, $T_{Stg}$ | | - 55 to 175 | °C |
| Maximum thermal resistance, junction to case per leg | $R_{thJC}$ | DC operation See fig. 4 | 0.8 | °C/W |
| Maximum thermal resistance, junction to case per package | | DC operation | 0.4 | |
| Typical thermal resistance, case to heatsink | $R_{thCS}$ | Mounting surface, smooth and greased | 0.25 | |
| Approximate weight | | | 6 | g |
| | | | 0.21 | oz. |
| Mounting torque minimum | | | 6 (5) | kgf · cm (lbf · in) |
| Mounting torque maximum | | | 12 (10) | |
| Marking device | | Case style TO-247AC (JEDEC) | 63CPQ100 | |

## ORDERING INFORMATION TABLE

| Device code | 63 | C | P | Q | 100 | PbF |
|---|---|---|---|---|---|---|
| | 1 | 2 | 3 | 4 | 5 | 6 |

1 - Current rating (60 A)

2 - Circuit configuration:
C = Common cathode

3 - Package:
P = TO-247

4 - Schottky “Q” series

5 - Voltage code

6 -
- None = Standard production
- PbF = Lead (Pb)-free

Tube standard pack quantity: 25 pieces

# TO-247

**DIMENSIONS** in millimeters and inches

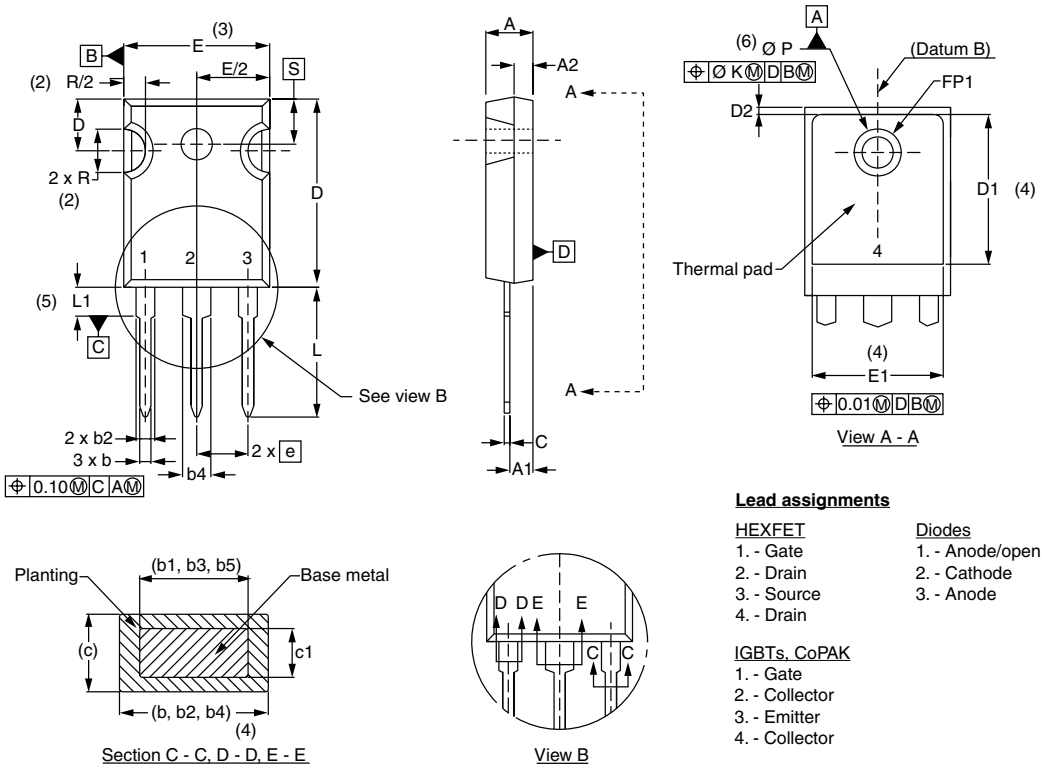


**Lead assignments**

HEXFET
1. - Gate
2. - Drain
3. - Source
4. - Drain

Diodes
1. - Anode/open
2. - Cathode
3. - Anode

IGBTs, CoPAK
1. - Gate
2. - Collector
3. - Emitter
4. - Collector

| SYMBOL | MILLIMETERS | | INCHES | | NOTES |
|---|---|---|---|---|---|
| | MIN. | MAX. | MIN. | MAX. | |
| A | 4.65 | 5.31 | 0.183 | 0.209 | |
| A1 | 2.21 | 2.59 | 0.087 | 0.102 | |
| A2 | 1.50 | 2.49 | 0.059 | 0.098 | |
| b | 0.99 | 1.40 | 0.039 | 0.055 | |
| b1 | 0.99 | 1.35 | 0.039 | 0.053 | |
| b2 | 1.65 | 2.39 | 0.065 | 0.094 | |
| b3 | 1.65 | 2.37 | 0.065 | 0.094 | |
| b4 | 2.59 | 3.43 | 0.102 | 0.135 | |
| b5 | 2.59 | 3.38 | 0.102 | 0.133 | |
| c | 0.38 | 0.86 | 0.015 | 0.034 | |
| c1 | 0.38 | 0.76 | 0.015 | 0.030 | |
| D | 19.71 | 20.70 | 0.776 | 0.815 | 3 |
| D1 | 13.08 | - | 0.515 | - | 4 |

| SYMBOL | MILLIMETERS | | INCHES | | NOTES |
|---|---|---|---|---|---|
| | MIN. | MAX. | MIN. | MAX. | |
| D2 | 0.51 | 1.30 | 0.020 | 0.051 | |
| E | 15.29 | 15.87 | 0.602 | 0.625 | 3 |
| E1 | 13.72 | - | 0.540 | - | |
| e | 5.46 BSC | | 0.215 BSC | | |
| FK | 2.54 | | 0.010 | | |
| L | 14.20 | 16.10 | 0.559 | 0.634 | |
| L1 | 3.71 | 4.29 | 0.146 | 0.169 | |
| N | 7.62 BSC | | 3 | | |
| FP | 3.56 | 3.66 | 0.14 | 0.144 | |
| FP1 | - | 6.98 | - | 0.275 | |
| Q | 5.31 | 5.69 | 0.209 | 0.224 | |
| R | 0.452 | 5.49 | 0.178 | 0.216 | |
| S | 5.51 BSC | | 0.217 BSC | | |

**Notes**

(1) Dimensioning and tolerancing per ASME Y14.5M-1994
(2) Contour of slot optional
(3) Dimension D and E do not include mold flash. Mold flash shall not exceed 0.127 mm (0.005") per side. These dimensions are measured at the outermost extremes of the plastic body
(4) Thermal pad contour optional with dimensions D1 and E1
(5) Lead finish uncontrolled in L1
(6) Ø P to have a maximum draft angle of 1.5 to the top of the part with a maximum hole diameter of 3.91 mm (0.154")
(7) Outline conforms to JEDEC outline TO-247 with exception of dimension c