Improved Quad CMOS Analog Switches

FEATURES

- ±22-V Supply Voltage Rating
- TTL and CMOS Compatible Logic
- Low On-Resistance—$r_{DS(on)}$: 45 Ω
- Low Leakage—$I_{D(on)}$: 20 pA
- Single Supply Operation Possible
- Extended Temperature Range
- Fast Switching—t_{ON}: 120 ns
- Low Glitching—Q: 1 pC

BENEFITS

- Wide Analog Signal Range
- Simple Logic Interface
- Higher Accuracy
- Minimum Transients
- Reduced Power Consumption
- Superior to DG201A/202
- Space Savings (TSSOP)

APPLICATIONS

- Industrial Instrumentation
- Test Equipment
- Communications Systems
- Disk Drives
- Computer Peripherals
- Portable Instruments
- Sample-and-Hold Circuits

DESCRIPTION

The DG201B/202B analog switches are highly improved versions of the industry-standard DG201A/202. These devices are fabricated in Vishay Siliconix' proprietary silicon gate CMOS process, resulting in lower on-resistance, lower leakage, higher speed, and lower power consumption.

These quad single-pole single-throw switches are designed for a wide variety of applications in telecommunications, instrumentation, process control, computer peripherals, etc. An improved charge injection compensation design minimizes switching transients. The DG201B and DG202B can handle up to ±22-V input signals, and have an improved continuous current rating of 30 mA. An epitaxial layer prevents latchup.

All devices feature true bi-directional performance in the on condition, and will block signals to the supply voltages in the off condition.

The DG201B is a normally closed switch and the DG202B is a normally open switch. (See Truth Table.)

FUNCTIONAL BLOCK DIAGRAM AND PIN CONFIGURATION

DG201B
Dual-In-Line, SOIC and TSSOP

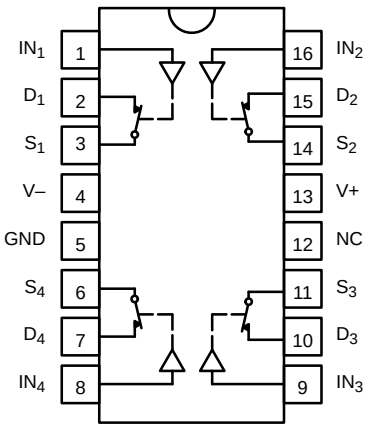

Top View

TRUTH TABLE

Logic	DG201B	DG202B
0	ON	OFF
1	OFF	ON

Logic "0" ≤ 0.8 V
Logic "1" ≥ 2.4 V

ORDERING INFORMATION		
Temp Range	**Package**	**Part Number**
–40 to 85°C	16-Pin Plastic DIP	DG201BDJ
		DG202BDJ
	16-Pin CerDIP	DG201BDK
		DG202BDK
	16-Pin Narrow SOIC	DG201BDY
		DG202BDY
	16-Pin TSSOP	DG201BDQ
		DG202BDQ
–55 to 125°C	16-Pin CerDIP	DG201BAK
		DG201BAK/883
		DG202BAK
		DG202BAK/883

ABSOLUTE MAXIMUM RATINGS

Voltages Referenced to V–
V+ . . . . . 44 V
GND . . . . . 25 V
Digital Inputs[a] V_S, V_D . . . . . (V–) –2 V to (V+) +2 V
or 30 mA, whichever occurs first
Current, Any Terminal . . . . . 30 mA
Peak Current, S or D
(Pulsed at 1 ms, 10% duty cycle max) . . . . . 100 mA
Storage Temperature (AK, DK Suffix) . . . . . –65 to 150°C
(DJ, DY, DQ Suffix) . . . . . –65 to 125°C

Power Dissipation (Package)b
16-Pin Plastic DIP[c] . . . . . 470 mW
16-Pin Narrow SOIC and TSSOP[d] . . . . . 640 mW
16-Pin CerDIP[e] . . . . . 900 mW

Notes:
a. Signals on S_X, D_X, or IN_X exceeding V+ or V– will be clamped by internal diodes. Limit forward diode current to maximum current ratings.
b. All leads welded or soldered to PC Board.
c. Derate 6.5 mW/°C above 75°C
d. Derate 7.6 mW/°C above 75°C
e. Derate 12 mW/°C above 75°C

SCHEMATIC DIAGRAM (TYPICAL CHANNEL)

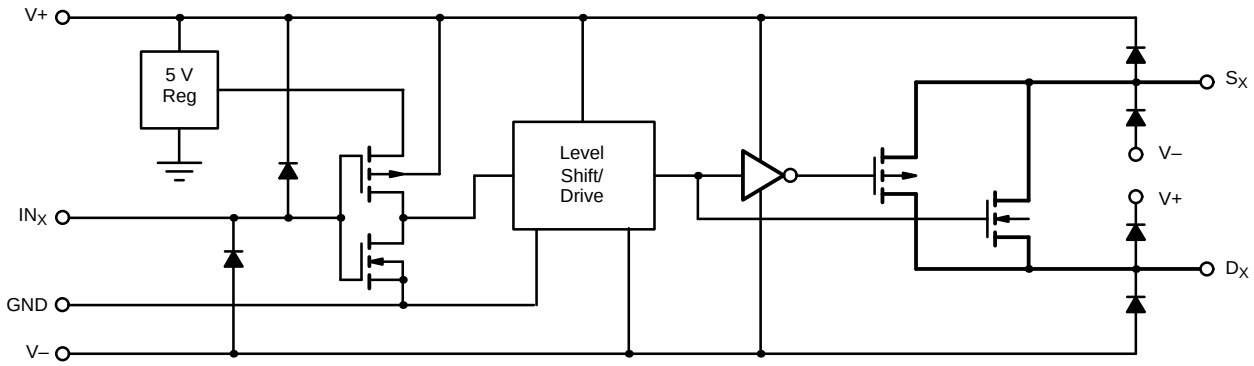

FIGURE 1.

SPECIFICATIONS[a]

Parameter	Symbol	Test Conditions Unless Specified V+ = 15 V, V– = –15 V V_{IN} = 2.4 V, 0.8 V[f]	Temp[b]	Typ[c]	A Suffix –55 to 125°C Min[d]	A Suffix –55 to 125°C Max[d]	D Suffix –40 to 85°C Min[d]	D Suffix –40 to 85°C Max[d]	Unit
Analog Switch									
Analog Signal Range[e]	V_{ANALOG}		Full		−15	15	−15	15	V
Drain-Source On-Resistance	$r_{DS(on)}$	V_D = ±10 V, I_S = 1 mA	Room Full	45		85 100		85 100	Ω
$r_{DS(on)}$ Match	$\Delta r_{DS(on)}$		Room	2					
Source Off Leakage Current	$I_{S(off)}$	V_S = ±14 V, V_D = ∓14 V	Room Full	±0.01	−0.5 −20	0.5 20	–0.5 –5	0.5 5	nA
Drain Off Leakage Current	$I_{D(off)}$	V_D = ±14 V, V_S = ∓14 V	Room Full	±0.01	−0.5 −20	0.5 20	−0.5 −5	0.5 5	
Drain On Leakage Current	$I_{D(on)}$	V_S = V_D = ±14 V	Room Full	±0.02	−0.5 −40	0.5 40	−0.5 −10	0.5 10	
Digital Control									
Input Voltage High	V_{INH}		Full		2.4		2.4		V
Input Voltage Low	V_{INL}		Full			0.8		0.8	
Input Current	I_{INH} or I_{INL}	V_{INH} or V_{INL}	Full		–1	1	–1	1	µA
Input Capacitance	C_{IN}		Room	5					pF
Dynamic Characteristics									
Turn-On Time	t_{ON}	V_S = 2 V See Switching Time Test Circuit	Room Full	120		300		300	ns
Turn-Off Time	t_{OFF}		Room Full	65		200		200	
Charge Injection	Q	C_L = 1000 pF, V_g = 0 V R_g = 0 Ω	Room	1					pC
Source-Off Capacitance	$C_{S(off)}$	V_S = 0 V, f = 1 MHz	Room	5					pF
Drain-Off Capacitance	$C_{D(off)}$		Room	5					
Channel On Capacitance	$C_{D(on)}$	V_D = V_S = 0 V, f = 1 MHz	Room	16					
Off Isolation	OIRR	C_L = 15 pF, R_L = 50 Ω V_S = 1 V_{RMS}, f = 100 kHz	Room	90					dB
Channel-to-Channel Crosstalk	X_{TALK}		Room	95					
Power Supply									
Positive Supply Current	I+	V_{IN} = 0 or 5 V	Room Full			50 100		50 100	µA
Negative Supply Current	I–		Room Full		−1 −5		−1 −5		
Power Supply Range for Continuous Operation	V_{OP}		Full		±4.5	±22	±4.5	±22	V

SPECIFICATIONS FOR SINGLE SUPPLY[a]									
Parameter	Symbol	Test Conditions Unless Specified V+ = 12 V, V– = 0 V V_{IN} = 2.4 V, 0.8 V[f]	Temp[b]	Typ[c]	A Suffix –55 to 125°C Min[d]	A Suffix –55 to 125°C Max[d]	D Suffix –40 to 85°C Min[d]	D Suffix –40 to 85°C Max[d]	Unit
Analog Switch									
Analog Signal Range[e]	V_{ANALOG}		Full		0	12	0	12	V
Drain-Source On-Resistance	$r_{DS(on)}$	V_D = 3 V, 8 V, I_S = 1 mA	Room Full	90		160 200		160 200	Ω
Dynamic Characteristics									
Turn-On Time	t_{ON}	V_S = 8 V See Switching Time Test Circuit	Room	120		300		300	ns
Turn-Off Time	t_{OFF}		Room	60		200		200	
Charge Injection	Q	C_L = 1 nF, V_{gen}= 6 V, R_{gen} = 0 Ω	Room	4					pC
Power Supply									
Positive Supply Current	I+	V_{IN} = 0 or 5 V	Room Full			50 100		50 100	μA
Negative Supply Current	I–		Room Full		−1 −5		−1 −5		
Power Supply Range for Continuous Operation	V_{OP}		Full		+4.5	+25	+4.5	+25	V

Notes:
a. Refer to PROCESS OPTION FLOWCHART.
b. Room = 25°C, Full = as determined by the operating temperature suffix.
c. Typical values are for DESIGN AID ONLY, not guaranteed nor subject to production testing.
d. The algebraic convention whereby the most negative value is a minimum and the most positive a maximum, is used in this data sheet.
e. Guaranteed by design, not subject to production test.
f. V_{IN} = input voltage to perform proper function.

TYPICAL CHARACTERISTICS (25°C UNLESS NOTED)

$r_{DS(on)}$ vs. V_D and Power Supply Voltages

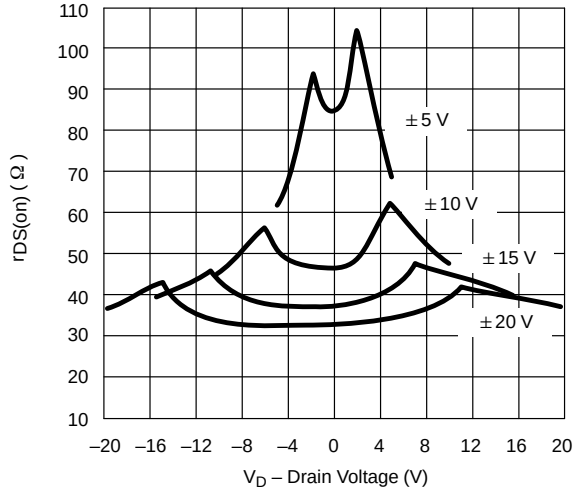

$r_{DS(on)}$ vs. V_D and Temperature

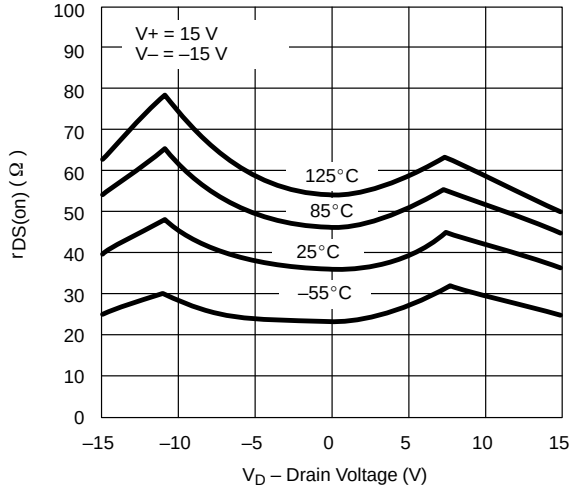

$r_{DS(on)}$ vs. V_D and Single Power Supply Voltages

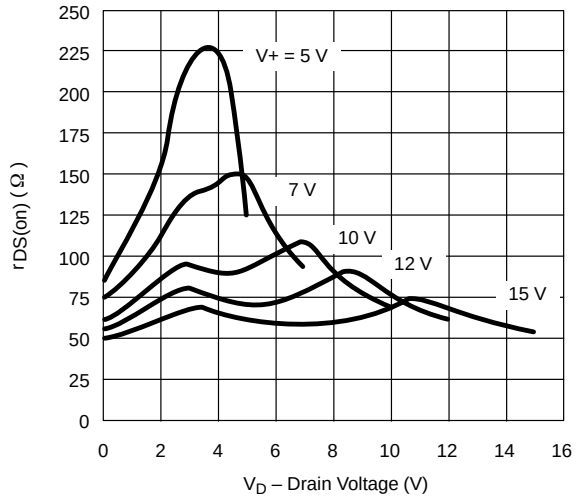

Input Switching Threshold vs. Supply Voltage

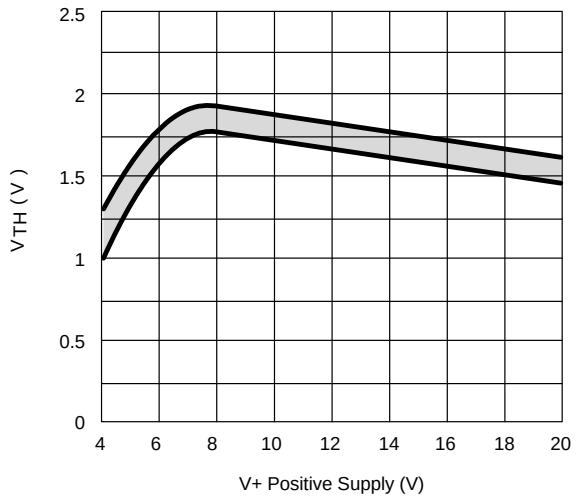

Leakage Currents vs. Analog Voltage

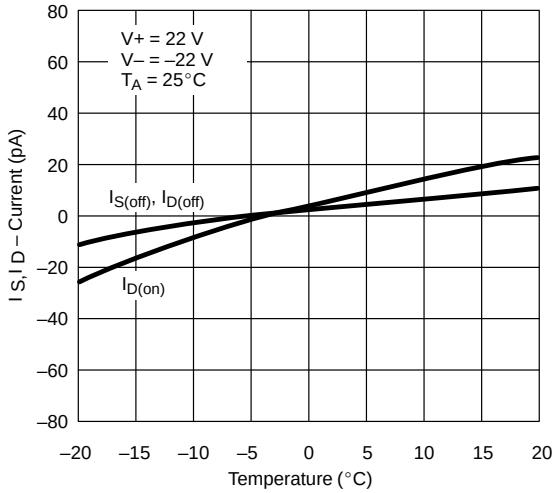

Leakage Currents vs. Temperature

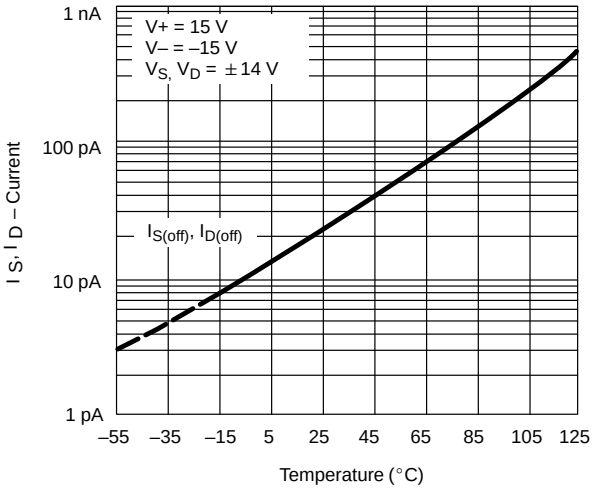

TYPICAL CHARACTERISTICS (25°C UNLESS NOTED)

Switching Time vs. Single Supply Voltage

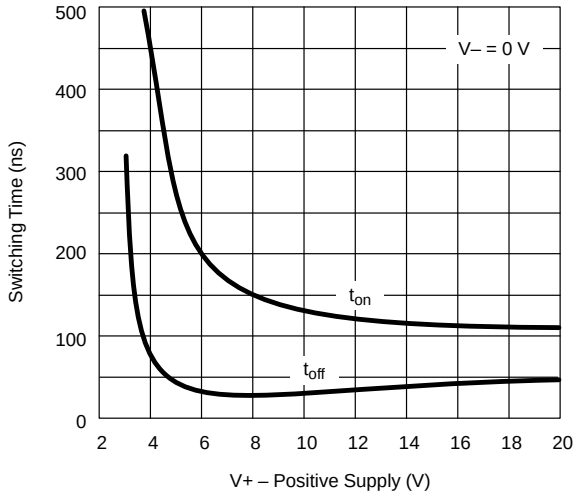

Switching Time vs. Power Supply Voltage

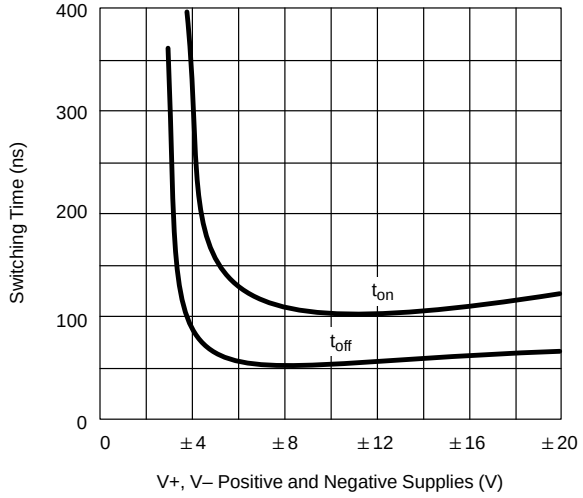

Q_S, Q_D – Charge Injection vs. Analog Voltage

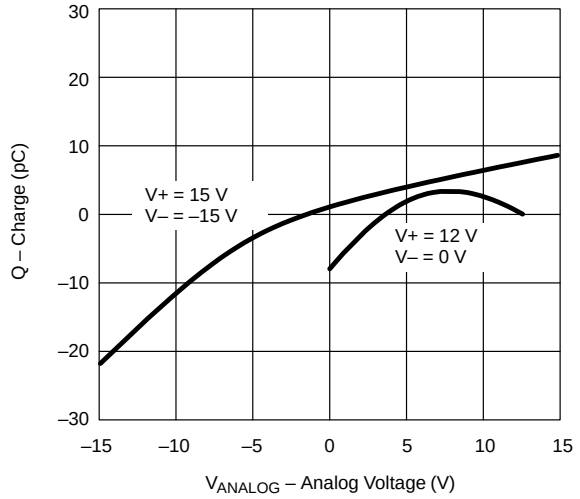

Off Isolation vs. Frequency

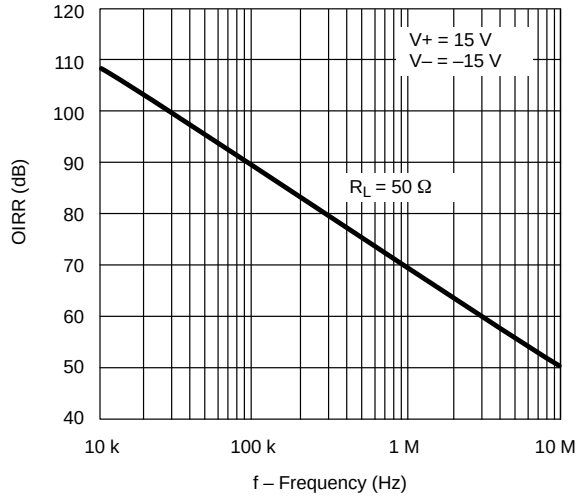

Supply Current vs. Switching Frequency

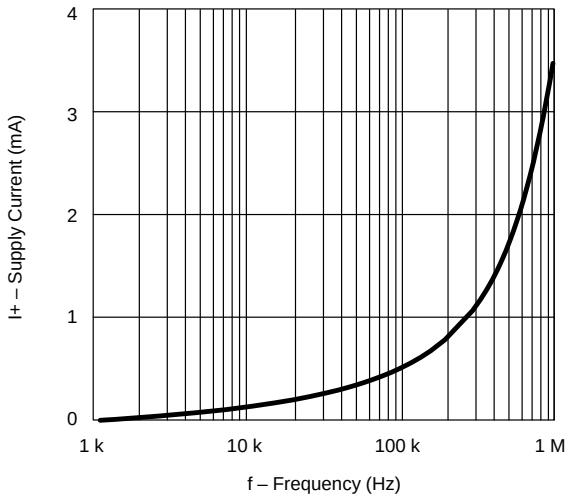

TEST CIRCUITS

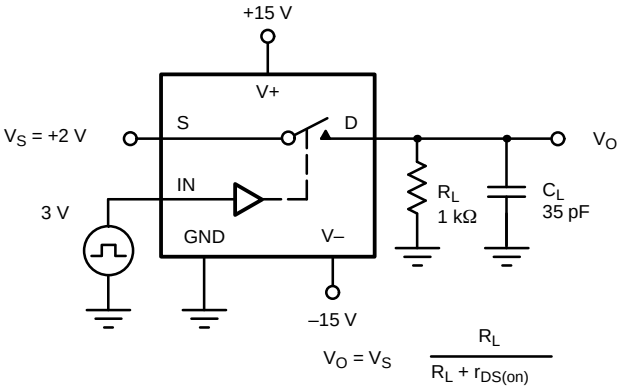

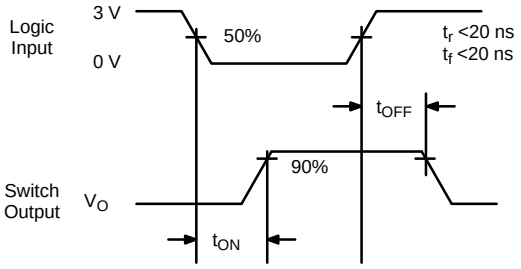

FIGURE 2. Switching Time

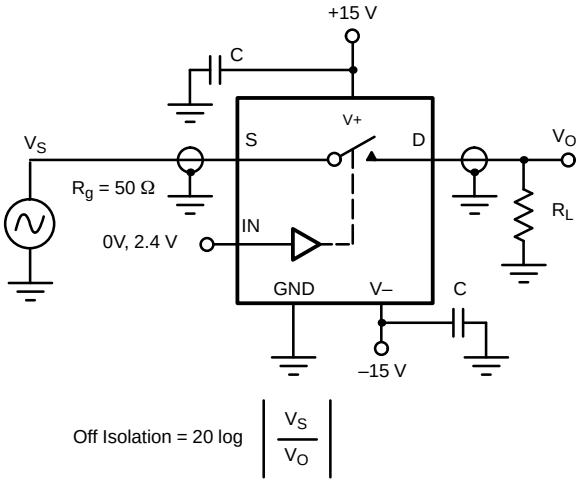

FIGURE 3. Off Isolation

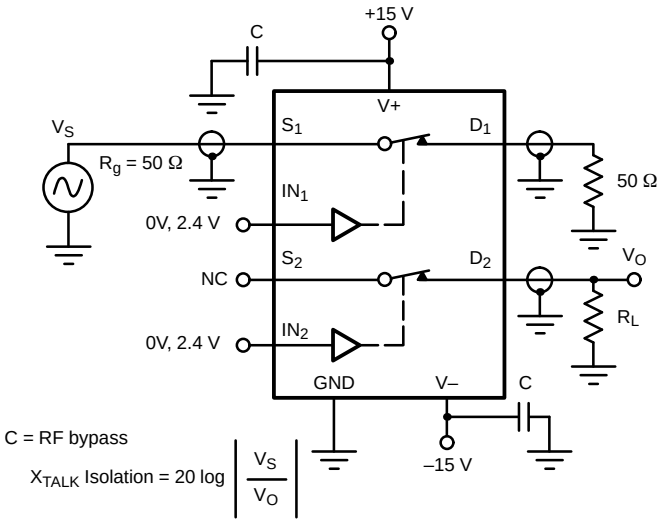

FIGURE 4. Channel-to-Channel Crosstalk

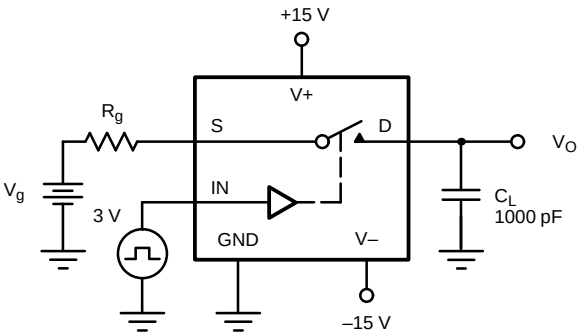

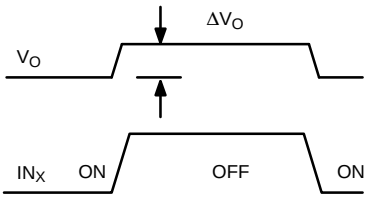

ΔV_O = measured voltage error due to charge injection
The charge injection in coulombs is $Q = C_L \times \Delta V_O$

FIGURE 5. Charge Injection

APPLICATIONS

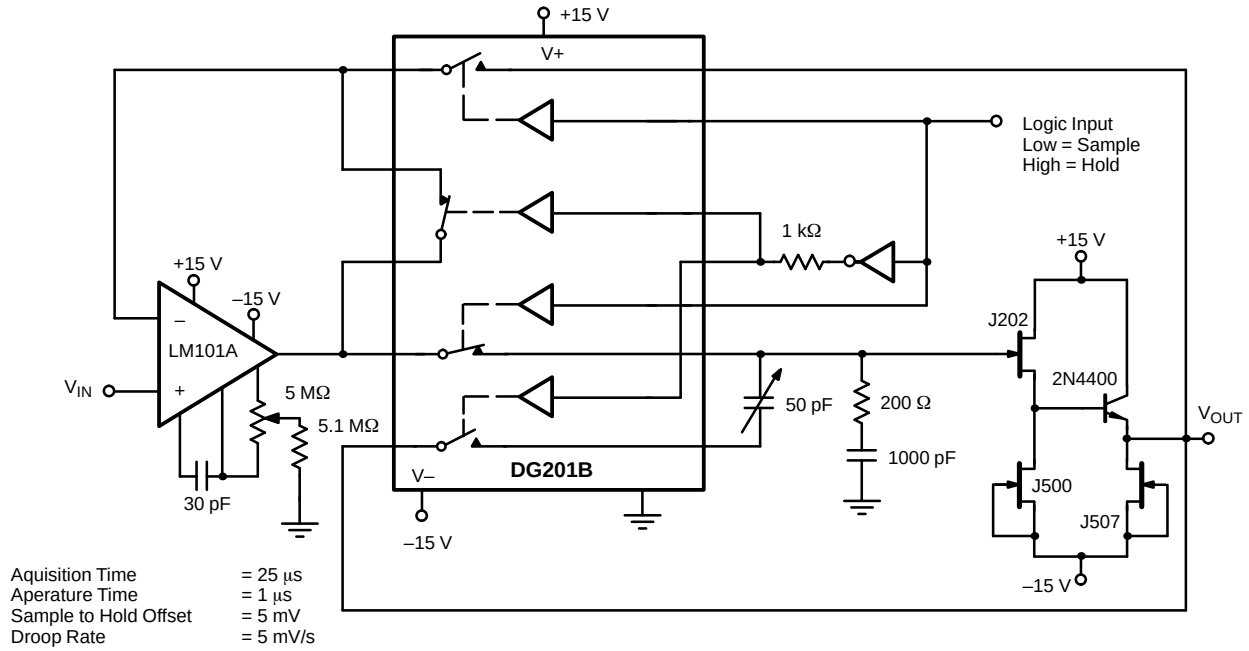

FIGURE 6. Sample-and-Hold

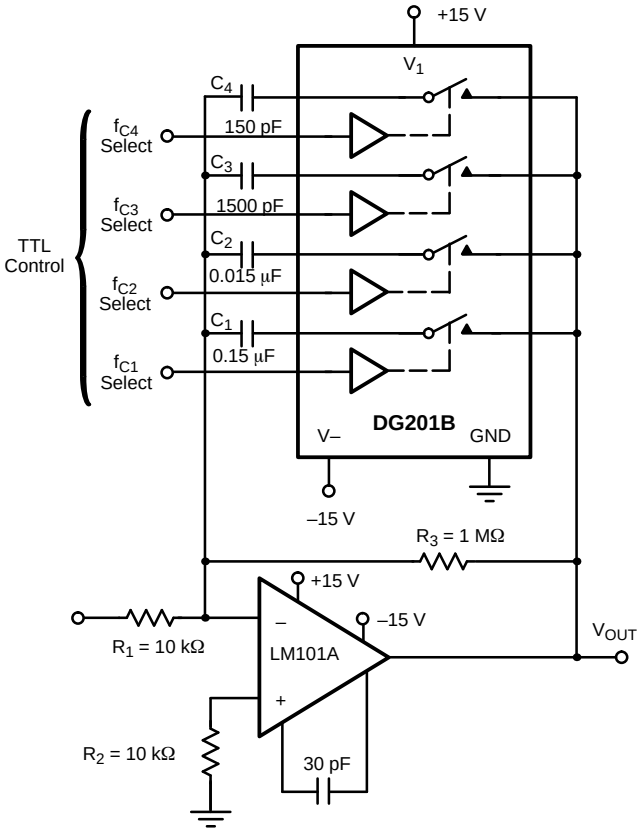

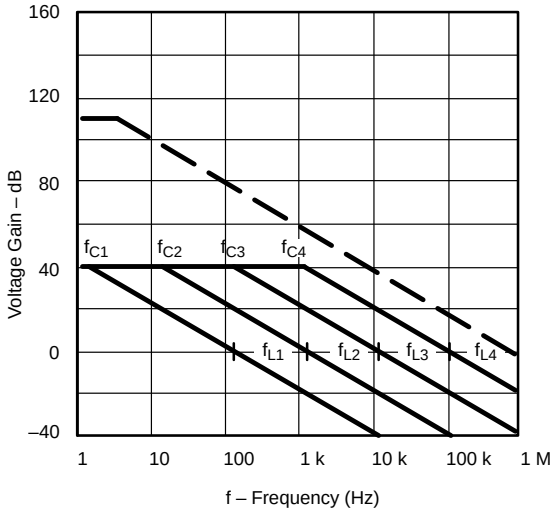

A_L (Voltage Gain Below Break Frequency) = $\frac{R_3}{R_1}$ = 100 (40 dB)

f_C (Break Frequency) = $\frac{1}{2\pi R_3 C_X}$

f_L (Unity Gain Frequency) = $\frac{1}{2\pi R_1 C_X}$

Max Attenuation = $\frac{r_{DS(on)}}{10\ k\Omega} \approx -47$ dB

FIGURE 7. Active Low Pass Filter with Digitally Selected Break Frequency

APPLICATIONS

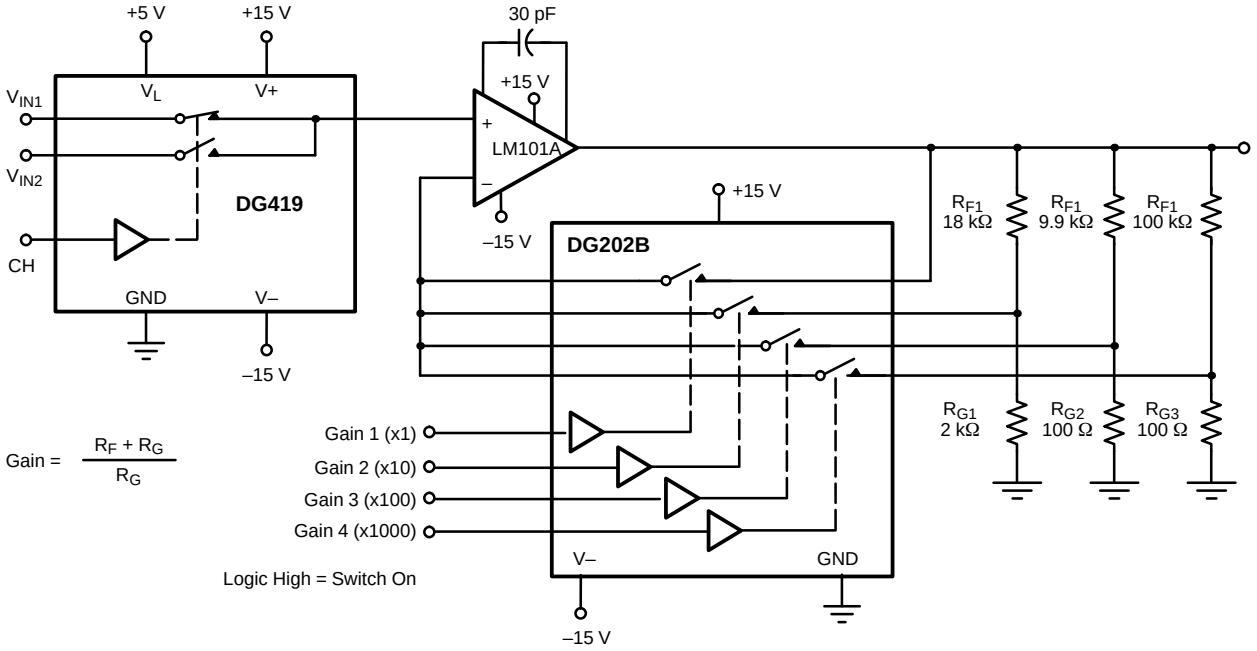

FIGURE 8. A Precision Amplifier with Digitally Programable Input and Gains

Notice

Specifications of the products displayed herein are subject to change without notice. Vishay Intertechnology, Inc., or anyone on its behalf, assumes no responsibility or liability for any errors or inaccuracies.

Information contained herein is intended to provide a product description only. No license, express or implied, by estoppel or otherwise, to any intellectual property rights is granted by this document. Except as provided in Vishay's terms and conditions of sale for such products, Vishay assumes no liability whatsoever, and disclaims any express or implied warranty, relating to sale and/or use of Vishay products including liability or warranties relating to fitness for a particular purpose, merchantability, or infringement of any patent, copyright, or other intellectual property right.

The products shown herein are not designed for use in medical, life-saving, or life-sustaining applications. Customers using or selling these products for use in such applications do so at their own risk and agree to fully indemnify Vishay for any damages resulting from such improper use or sale.