TELEDYNE RELAYS
Everywhereyoulook™

Series SD

Dual Ouput to 50A 600 Vac
DC Control Solid-State Relay

Part Number	Description
SD24R50-06	12-280 Vac
SD24R50	12-280 Vac
SD24D40-06	12-280 Vac
SD24D50-06	12-280 Vac
SD48D50A	24-600 Vac
SD48D50A2	24-600 Vac

Part Number Explanation

SD	48	R	50	-06
Series	*Line Voltage*[1]	*Switch Type*[2]	*Output Current - Amps*	*Feature*[3]

NOTES
1) Line Voltage (nominal): 24 = 240 Vac; 48 = 480 Vac
2) Switch Type: R = Random turn-on; D = Zero-cross turn-on;
3) Features: -06 = Faston terminals
A = Common control adapter
A2 = Individual control adapter

INPUT (CONTROL) SPECIFICATION

	Min	Max	Units
Control Range			
SD24	4	30	Vdc
SD48D50XX	10	30	Vdc
Input Current Range	3		mA
Must Turn-Off Voltage		1	Vdc
Input Resistance (Typical)			
SD24		1000	Ohms
SD48D50A		1400	Ohms
SD48D50A2		1800	Ohms
Reverse Voltage Protection		30	V

FEATURES/BENEFITS
- Designed for all types of loads
- Dual output (two relays in one package)
- Faston terminals
- Connector for common or individual control
- Tight zero-cross window for low EMI
- High immunity to surges

DESCRIPTION
The Series SD dual-phase relays are designed for all types of loads. The design incorporates two relays in a single package. The relays utilize optical isolation to protect the control from load transients. High-current models are excellent for motor and phase angle control. The 50A 600 Vac models are available with common control connector or individual control connector. Applications include motor control, heating control, uninterruptible power supplies, light dimmers, industrial and process control, and on/off controls of AC equipment.

APPROVALS
All models are UL recognized.
UL File Number: E128555.

BLOCK DIAGRAM

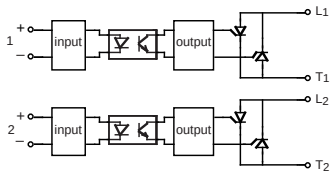

Figure 1a — All SD relays

MECHANICAL SPECIFICATION

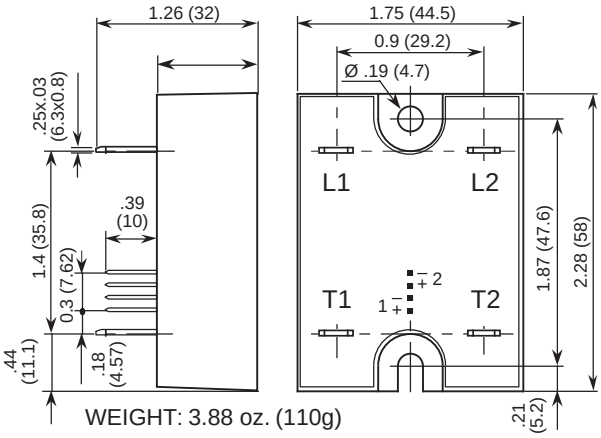

Figure 2a — SD24R50-06, SD24D50-06; dimensions in inches (mm)

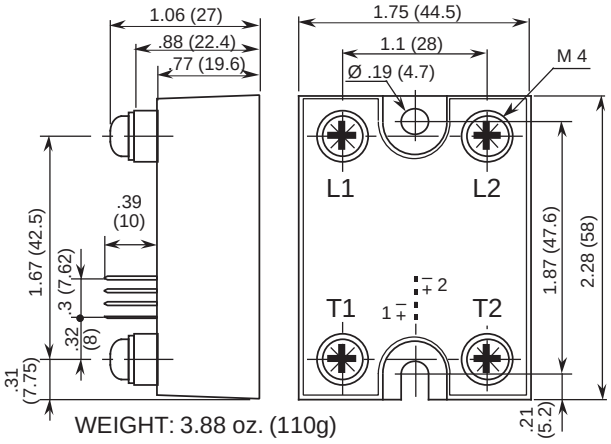

Figure 2b — SD24R50; dimensions in inches (mm)

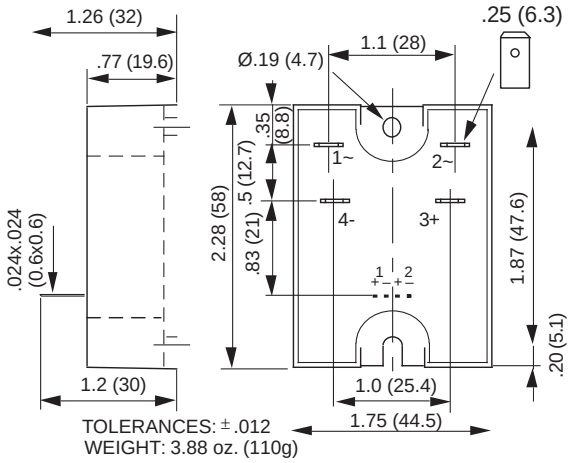

Figure 2c — SD24D40-06; dimensions in inches (mm)

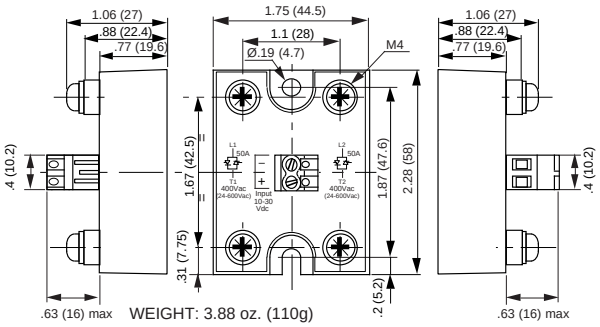

Figure 2d — SD48D50A; dimensions in inches (mm)

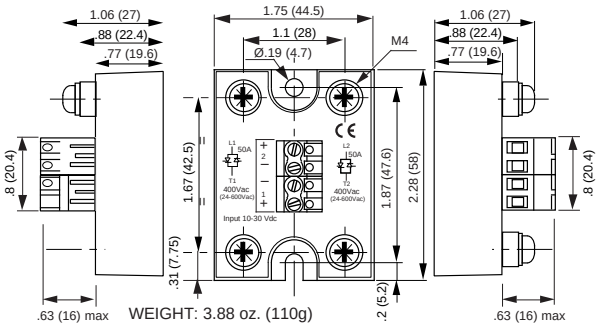

Figure 2e — SD48D50A2; dimensions in inches (mm)

TYPICAL APPLICATION

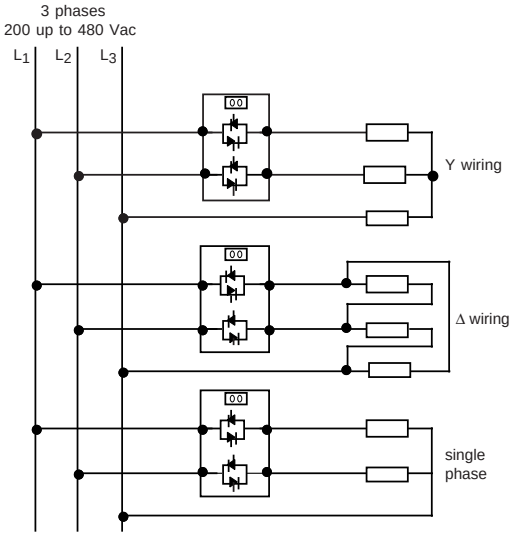

Figure 3 — SD48D50A

OUTPUT (LOAD) SPECIFICATION

	Input Type	Min	Max	Units
Operating Range				
SD24	R/D	12	280	Vrms
SD48D50XX		24	600	Vrms
Peak Voltage				
SD24			600	Vpeak
SD48			1200	Vpeak
Load Current Range (Resistive)				
SD24D40-06		.005	40	Arms
All other relays		.005	50	Arms
Maximum Surge Current Rating (Non-Repetitive)				
SD24D40-06			350	A
All other relays			550	A
On-State Voltage Drop			1.6	V
Zero-Cross Window				
SD	R		NA	
SD	D/A		±12	Vac
Off-State Leakage Current (60Hz)			2.5	mA
Turn-On Time (60 Hz)				
SD24	R		0.1	ms
All other relays			8.3	ms
Turn-Off Time (60 Hz)			8.3	ms
Off-State dv/dt			500	V/µs
Maximum di/dt (Non-Repetitive)			50	A/µs
Operating Frequency Range		10	440	Hz
I^2t for Match Fusing (<8.3ms)				
SD24D40-06			612	A^2S
All other relays			1500	A^2S

CONTROL CHARACTERISTICS

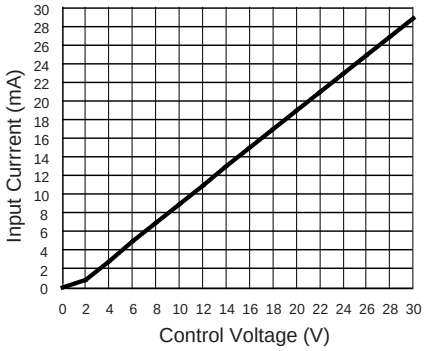

Figure 4a — SD24

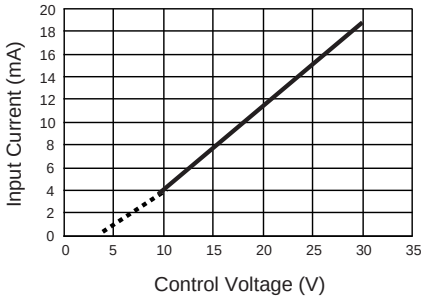

Figure 4b — SD48D50A relay

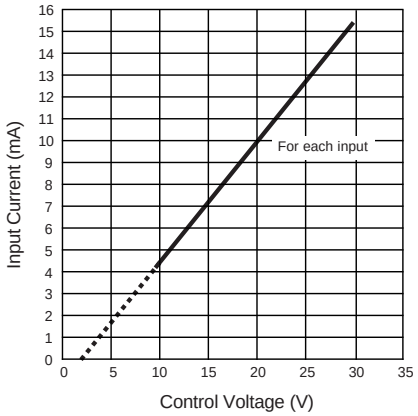

Figure 4c — SD48D50A2 relay

ENVIRONMENTAL SPECIFICATION

	Min	Max	Units
Operating Temperature	–40	100	°C
Storage Temperature	–40	100	°C
Input-Output Isolation			
SD24D40-06	4000		Vrms
All other relays	3300		Vrms
Output-Case Isolation			
SD24D40-06	2500		Vrms
All other relays	3300		Vrms
Output to Output			
SD48D50XX	3300		Vrms
All other relays	2500		Vrms
Junction-Case Thermal Resistance			
SD24D40-06		1.1	°C/W
All other relays		0.5	°C/W

SURGE CURRENT

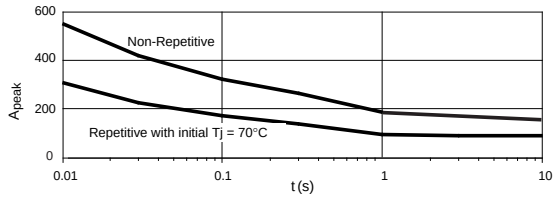

Figure 5a — SD24 50A output current

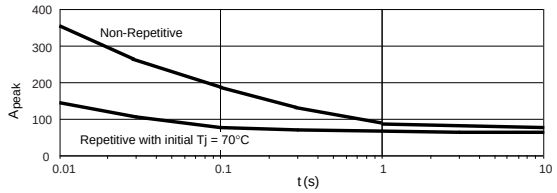

Figure 5b — SD48 40A and SD24 40A output current

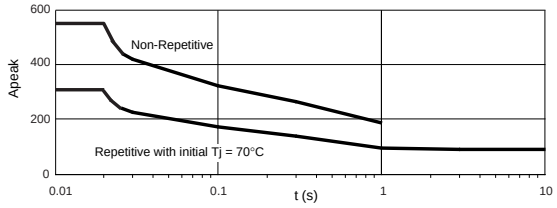

Figure 5c — SD48 50A output current

THERMAL CHARACTERISTICS

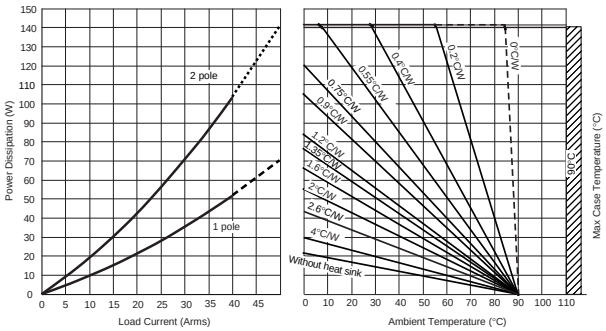

Figure 6a — SD24 50A relays output current

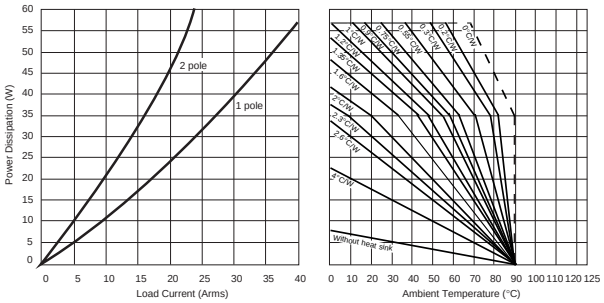

Figure 6b — SD24D40-06 output current

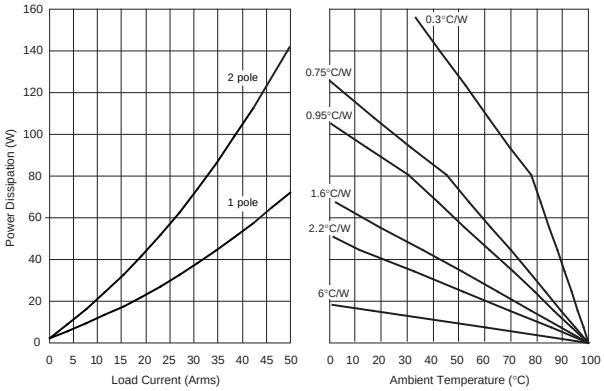

Figure 6c— SD48D50A and SD48D50A2 output current

NOTES:
1. Electrical specifications at 25°C unless otherwise specified.
2. For 800Hz applications, contact factory.
3. For additional/custom applications, contact factory.

OPTIONAL ADD-ONS

Please order add-ons separately:
- -12 — Thermal pad installed.
- -14 — Plastic touch-proof cover.