250W General type Variable Frequency Drive with PFC function **VFD-250P-230**

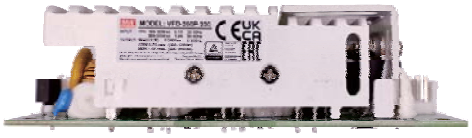

ECO Industrial Automate Household

Features

- 5"×3" miniature size
- 90~264Vac input, Built-in PFC function
- Controllable with external controller
- Fanless design for no-noise and expanding life cycle
- High surge current 200% up to 5 seconds
- Protections: Short circuit/OCP
- Provided multiple sensors for control:
  Current sensor- motor torque control
  DC bus voltage sensor- OVP/UVP
  Temperature sensor - OTP
- -30~+70℃ wide operating temperature
- Suitable for three phase motor drive
  (BLDC, Induction motor, SynRM)
- 3 years warranty

Applications

- HVAC
- Fan
- Pump
- Automatic door
- Air condition
- Conveyor
- Medical device
- Fitness equipment

GTIN CODE

MW Search: https://www.meanwell.com/serviceGTIN.aspx

Description

VFD-250P-230 is a variable frequency drive that can be controlled with external PWM controller. The input range is from 90VAC to 264VAC which is suitable for all kinds of installation. It is in size of 5" x 3" and built-in PFC function. VFD-250P-230 able to deliver 200% peak current and with fan-less design, the life time can be extended. VFD is suitable for three-phase motor drive, such as BLDC, Induction motor, SynRM applications.

Model Encoding

VFD - 250 P - 230

- 230 — Nominal output voltage
- P — PCB type
- 250 — Wattage

250W General type Variable Frequency Drive with PFC function VFD-250P-230

SPECIFICATION

MODEL NO.			VFD-250P-230
OUTPUT	VOLTAGE RANGE(UVW) Note.1		Three phase line-to-line 0~240V, suit for 200-240V class motor
	CAPACITY		250W
	CURRENT	CONVECTION	1A
		15CFM	1.6A
	POWER	CONVECTION	250W
		15CFM	400W
	PEAK CURRENT Note.2		2A
	EFFICIENCY Note.3		91.5%
	DC BUS VOLTAGE		380±5VDC
INPUT	RATED INPUT VOLTAGE		90 ~ 264VAC
	INPUT FREQUENCY RANGE (Hz)		47 ~ 63Hz
	POWER FACTOR (Typ.)		PF>0.99/115VAC, PF>0.93/230VAC at full load
	RATED INPUT CURRENT		2.6A /115VAC 1.3A/230VAC
	INRUSH CURRENT		Cold start 70A
	LEAKAGE CURRENT		<2mA/240VAC
FUNCTION (Note.5)	INVERTER PWM INPUT		PWM control signal input for driving inverter IGBTs. (PIN8~13 of CN93) TTL input : IGBT ON: High(>2.6V); IGBT OFF: Low(<0.8V) ; Iin =2mA
	FAULT SIGNAL		Inverter fault signal(Short circuit/OCP, PIN7 of CN93). TTL input: Normal: High(>3V); Abnormal: Low(<0.5V)
	DC BUS VOLTAGE SENSOR		DC BUS voltage sensor output(HV+ sensor, PIN1 of CN93): 2.5V@DC BUS 380V
	THREE PHASE CURRENT SENSOR		Built-in 100mΩ low-side shunt resisor (each phase), (PIN4~6 of CN93)
	THERMAL SENSOR		Built-in 10KΩ NTC for sensing IGBTs operating temperature. (TSM2A103F34D1R (Thinking Electronic), PIN2 of CN93)
	AUXILIARY POWER VCC		Non-isolated 15V output power for user's application. Max current : 0.1A, Ripple:1V
PROTECTION	SHORT CIRCUIT		Protection type : Shut down o/p voltage, re-power on to recover
OUTPUT FREQUENCY	SWITCHING FREQUENCY RANGE		2.5KHz ~ 15KHz
ENVIRONMENT	COOLING SYSTEM		Air convection
	WORKING TEMP.		-30 ~ +70℃ (Refer to "Dreating Curve")
	WORKING HUMIDITY		20 ~ 90% RH non-condensing
	STORAGE TEMP., HUMIDITY		-40 ~ +85℃, 10 ~ 95% RH non-condensing
	VIBRATION		10 ~ 500Hz, 2G 10min./1cycle, period for 60min. each along X, Y, Z axes
SAFETY & EMC	SAFETY STANDARDS		Design refer to EN61800-5
	WITHSTAND VOLTAGE		I/P-FG:2KVAC
	ISOLATION RESISTANCE		I/P-FG:100M Ohms/500VDC/25℃/ 70%RH
	EMC EMISSION		Compliance to EN61800-3 C2, BS EN/EN61000-3-2,-3
	EMC IMMUNITY		Compliance to BS EN/EN61000-4-2,3,4,5,6,8,11, EN61000-2-4, EN60146-1-1, EN61000-2-1
OTHERS	DIMENSION (L*W*H)		127*76.2*35mm
	PACKING		0.26kg; 48pcs/13.34kg/2.01CUFT
NOTE	1. 3-phase 220V motor is recommended.Please consider the rated current when used for 100-120V class motor. 2. Refer to peak load usage definition. 3. Efficiency is tested by 250W with 150VAC output line-to-line voltage. 4. All parameters NOT specially mentioned are measured at 230VAC input, rated load and 25℃ of ambient temperature. 5. Please refer to page 4 for more details. ※ Product Liability Disclaimer : For detailed information, please refer to https://www.meanwell.com/serviceDisclaimer.aspx		

Block Diagram

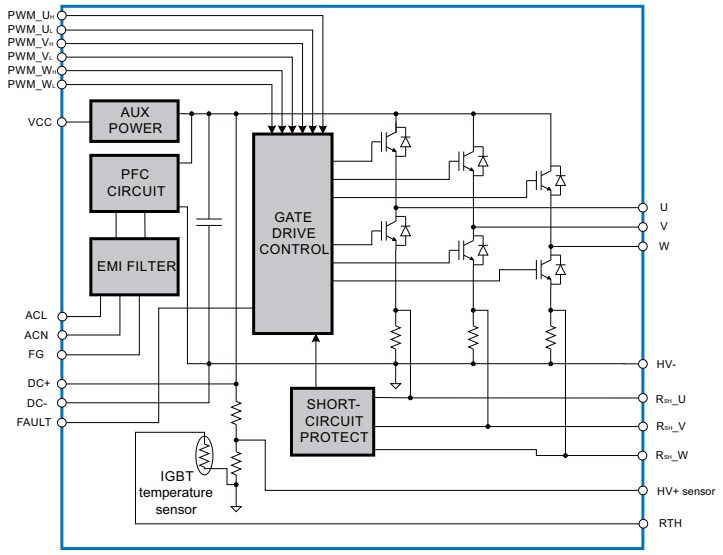

V/I CURVE

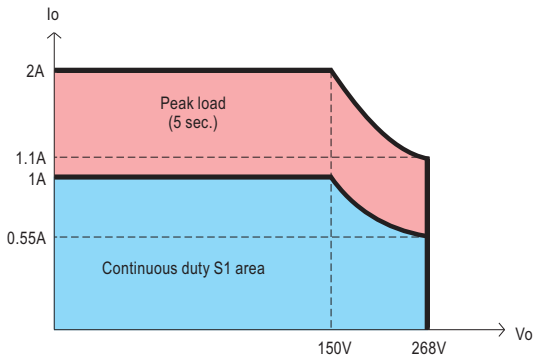

Derating Curve

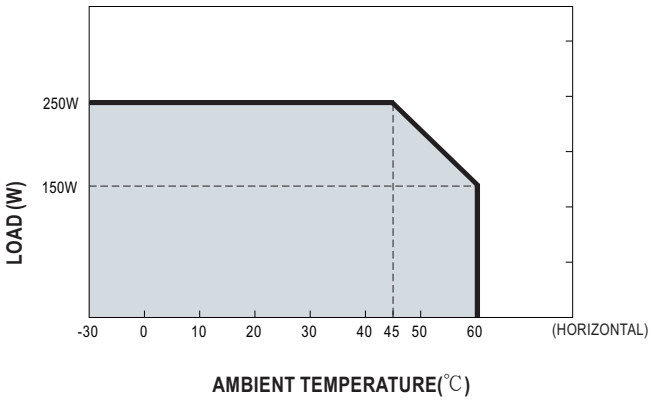

Output Derating VS Input Voltage

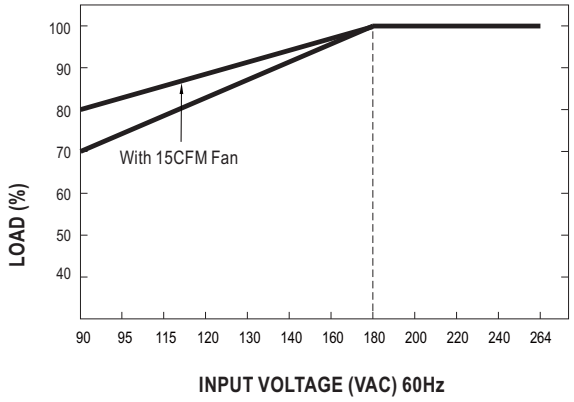

Peak Load

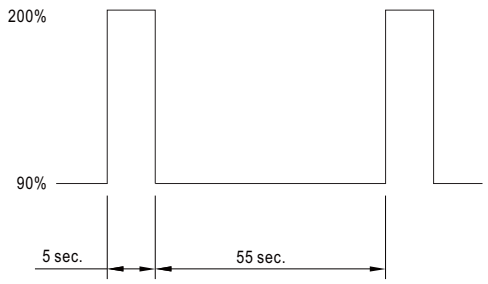

Efficiency vs Load

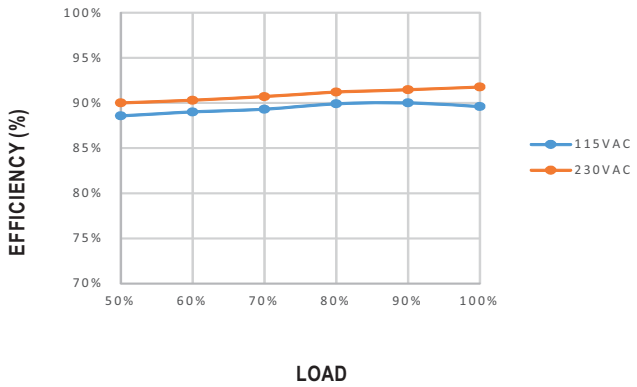

■ Function Manual

1. 3-phase PWM Control

VFD-250P-230 provides six-switch circuit by using 3 half-bridge IGBTs. IGBTs of each phase is controlled by PWM_U_H/U_L, PWM_V_H/V_L and PWM_W_H/W_L (PIN 8~13). The input requirement for PWM is compatible with both TTL and CMOS 3.3V signals. Please refer to the diagram below.

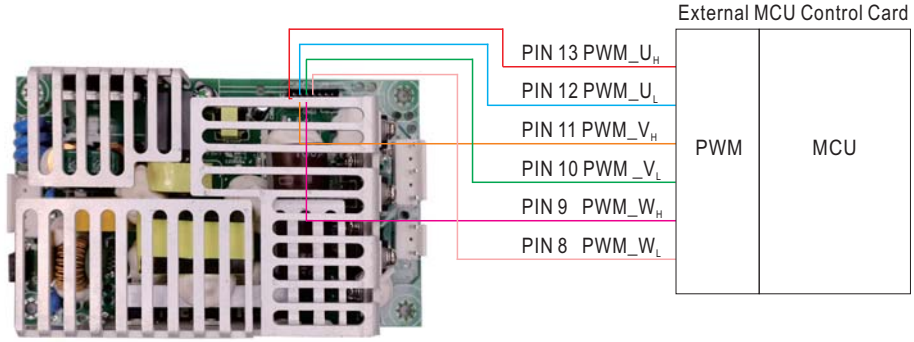

WARNING: It is necessary to keep minimum dead-time between the upper and lower switch of each phase.

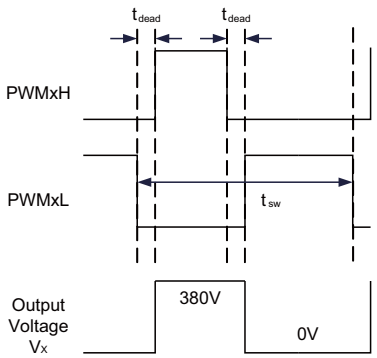

t_{dead} (Min.)	300ns

t_{dead} : Switching Dead time x = U, V, W

t_{sw} : Switching period

2. 3-phase Current Detection & Overcurrent Protection

Low-side shunt resistors are installed on each phase of VFD-250P-230 for current measurement and short-circuit detection. It's suggested to shorten the length of external detection circuit and detect the signal with a OPAs. Please refer to diagram below.

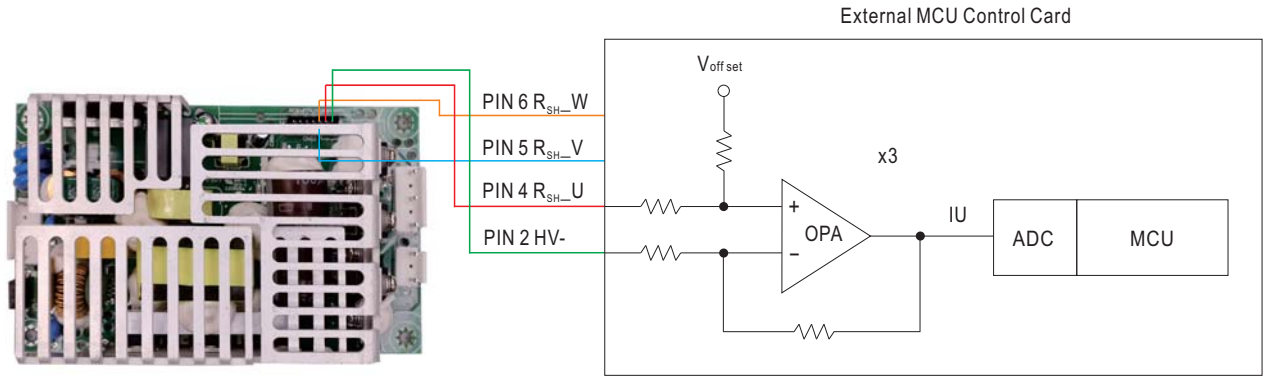

If output current exceed 200% of rated value, the protection circuit will be triggered and shut down the gate driver for protection.

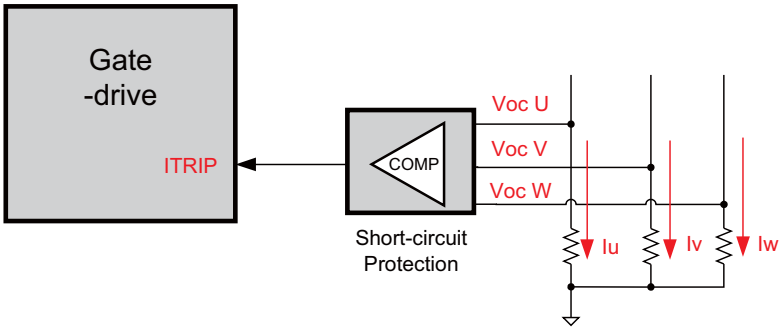

3. DC BUS Voltage Detection

VFD-250P-230 is build-in with DC bus voltage sensor(HV+ sensor, PIN 1). The sensor provides a 2.5V output when DC bus voltage is at 380V. It's suggested to detect the signal by OPAs. When the voltage of the DC bus exceed 420V, the PWM input signal must shut down for protection.

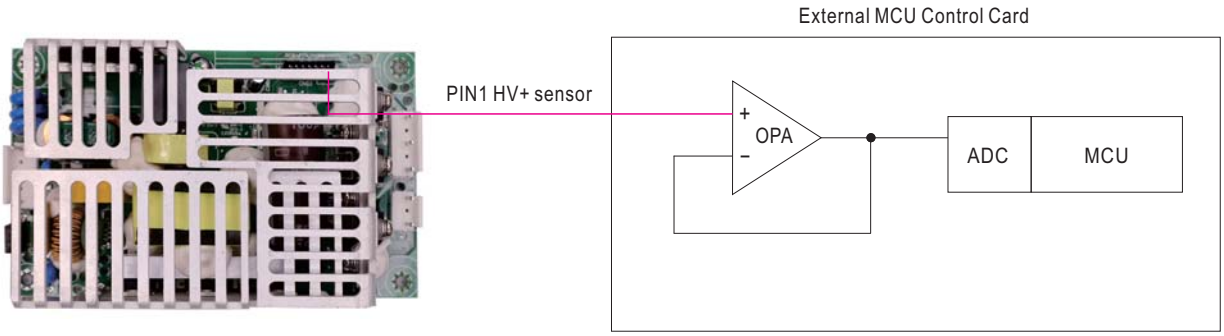

Equation for DC bus voltage calculation:

$$V_{DC\,BUS} = \frac{380 \times HV{+}sensor}{2.5}$$

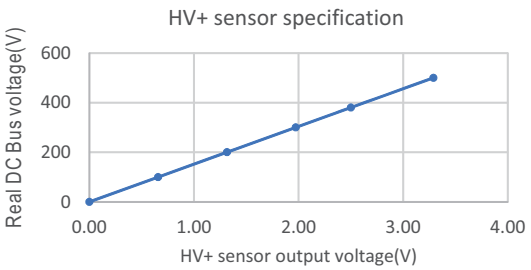

4. IGBT Temperature Detection

VFD-250P-230 is built-in a NTC resistor for detecting IGBTs temperature. Users can detect IGBTs temperature for protection. (NTC type: TSM2A103F34D1R, Thinking Electronic) The recommended detection circuit is below. It's suggested to shutdown the PWMs input, if the temperture is above 90℃.(no fan).

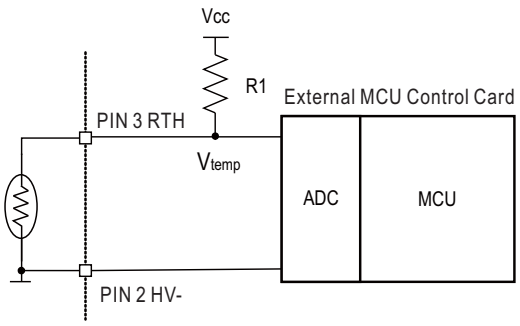

5. Driver Fault signal

The FAULT signal would be active(active-low) to notify external controller or circuit, if VFD-250P-230 encounter the overcurrent state and keep the state for minimum overcurrent tripping time

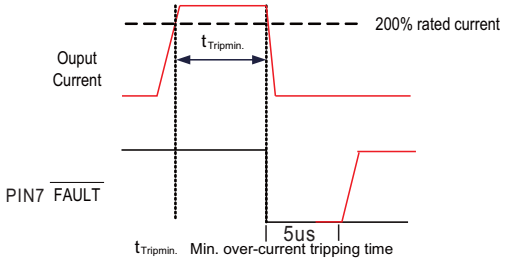

$t_{Tripmin.}$(Max.)	1us

■ Mechanical Specification

Unit:mm

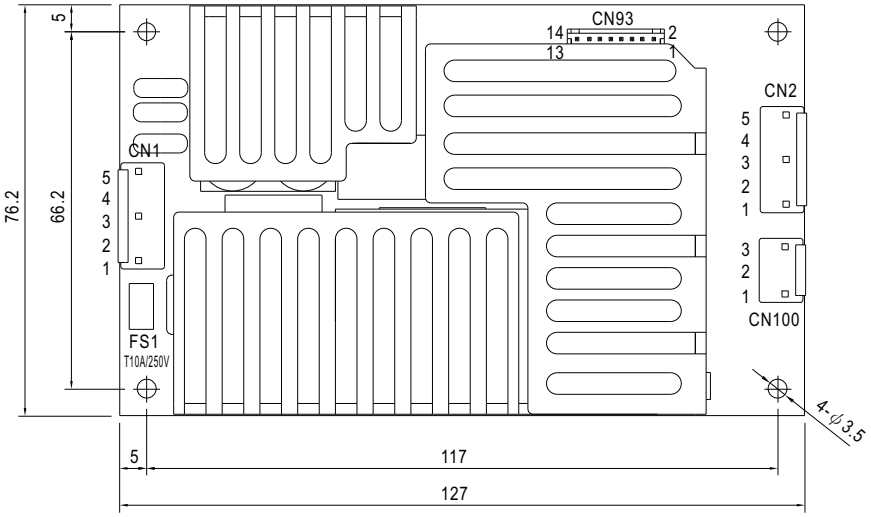

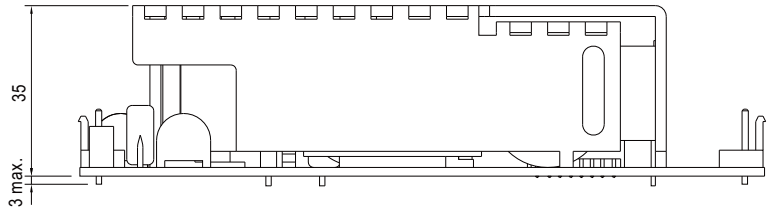

AC Input Connector (CN1) : JST B5P-VH or equivalent

Pin No.	Assignment
1	AC/L
2,4	No Pin
3	AC/N
5	FG ⏚

Mating housing: JST VHR or equivalent
Terminal: JST SVH-21T-P1.1 or equivalent

PWM Output Connector(CN2): JST B5P-VH or equivalent

Pin No.	Assignment
1	U
2,4	No Pin
3	V
5	W

Mating housing: JST VHR or equivalent
Terminal: JST SVH-21T-P1.1 or equivalent

380V DC Bus Connector(CN100): JST B3P-VH or equivalent

Pin No.	Assignment
1	DC+
2	No Pin
3	DC-

Mating housing: JST VHR or equivalent
Terminal: JST SVH-21T-P1.1 or equivalent
※ CN100 is used for installing regenerative brake device, avoiding VFD-250P-230 damage.

Control Pin NO. Assignment (CN93) : HRS DF11-14DP-2DS or equivalent

Pin No.	Assignment	Pin No.	Assignment
1	HV+ sensor	8	PWM_W_H
2	HV-	9	PWM_W_L
3	RTH	10	PWM_V_H
4	R_{SH}_U	11	PWM_V_L
5	R_{SH}_V	12	PWM_U_H
6	R_{SH}_W	13	PWM_U_L
7	FAULT	14	VCC

Mating housing: HRS DF11-14DS or equivalent
Terminal HRS DF11-**SC or equivalent

※Control Pin No. Assignment(CN93) :

Pin No.	Function	Description
1	HV+ sensor	DC BUS voltage sensor output 2.5V, reference to pin 2(HV-)
2	HV-	DC BUS voltage sensor output ground
3	RTH	Temperature sensor
4	R_{SH}_U	U phase current sensor output
5	R_{SH}_V	V phase current sensor output
6	R_{SH}_W	W phase current sensor output
7	FAULT	Over current detection. Normal > 3V, Abnormal < 0.5V
8	PWM_W_H	W phase high side logic input, on > 2.6V ; off < 0.8V
9	PWM_W_L	W phase low side logic input, on > 2.6V ; off < 0.8V
10	PWM_V_H	V phase high side logic input, on > 2.6V ; off < 0.8V
11	PWM_V_L	V phase low side logic input, on > 2.6V ; off < 0.8V
12	PWM_U_H	U phase high side logic input, on > 2.6V ; off < 0.8V
13	PWM_U_L	U phase low side logic input, on > 2.6V ; off < 0.8V
14	VCC	Auxiliary voltage output 14.5~15.5V reference to pin(HV-). The maximum load current is 0.1A

■ APPLICATION

Application example: BLDC drive application

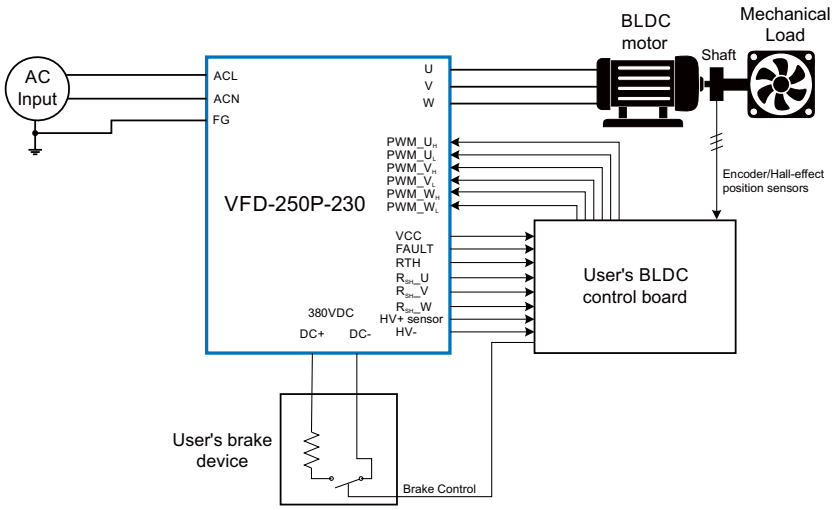

1.The figure shows the BLDC drive system which set up with VFD-250P-230.

2.Developers can control the PWM signal of 6-switch by using SPWM or SVPWM, etc. for 3-phase voltage modulation, and build the control method base on the current shunt sensors on 3-phase low-side switch(RSHU/V/W) and the DC BUS voltage sensor(HV+ sensor) which provided by VFD-250P-230.

3.Developers select the appropriate BLDC position sensors such as encoder or Hall-effect sensors to fit their applications.

4.It's suggested to install the brake circuit/device at the DC+/DC- pin(DC BUS) for avoiding the DC BUS OVP when BLDC is decelerating.

5.It's suggested to shut down the PWM input or connect to brake resistor device for safety when DC Bus voltage is higher than 420V.

6.If VFD-250P-230 were applied non-appropriate control, such as accelerating too quickly or bad current control, it might trig the VFD-250P-230's fault-state to shut down the output voltage(low-level on FAULT pin).

■ DC VFD CONTROL SOLUTION PROGRAM

If have any control solution requirement of specific application. Please contact us.

MW's order No.	Item		Quantity
Control board	Mechanical assembly suggestion		1

■ TYPICAL APPLICATION

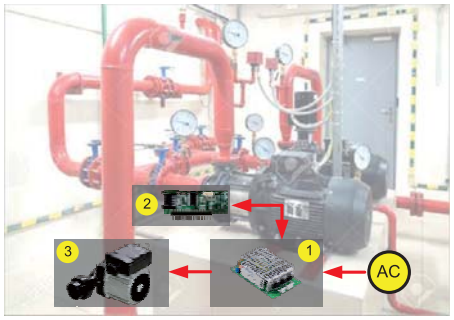

1. Variable Frequency Module (VFD series)
2. Control board of Variable Frequency Drive (Designed by User or Soluton Provided by MeanWell
3. Three-phase Pump Motor

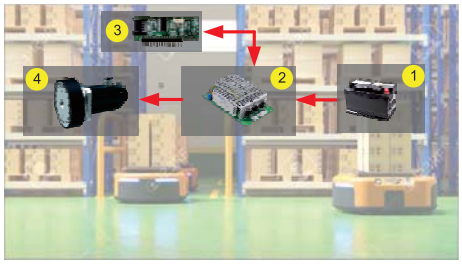

1. Battery
2. Variable Frequency Module (VFD series)
3. Control board of Variable Frequency Drive (Designed by User or Soluton Provided by MeanWell
4. Three-phase Wheel Motor for AGV Application

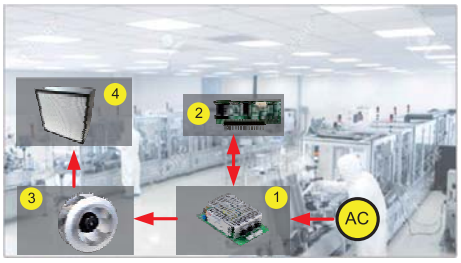

1. Variable Frequency Module (VFD series)
2. Control board of Variable Frequency Drive (Designed by User or Soluton Provided by MeanWell
3. Three-phase Fan Motor
4. HEPA for Filtering Air

■ Installation Manual

Please refer to : http://www.meanwell.com/manual.html