THIS COPY IS PROVIDED ON A RESTRICTED BASIS AND IS NOT TO BE USED IN ANY WAY DETRIMENTAL TO THE INTERESTS OF PANDUIT CORP.

PANDUIT PART NO. *	MATERIAL SUFFIX	RECOMMENDED FASTENER	'A'	'B'	'C'	'D'	'E'	'F'	'G' REF.	'H' REF.	'I' REF.	USE WITH THESE CABLE TIE CROSS SECTIONS	WEIGHT (g) lbs/100 pcs.
TM1S4	NONE -0 -30 -69	#4 (M2.5) SCREW	0.513 [13.0]	0.316 [8.0]	0.230 [5.8]	0.130 +/-.020 [3.3] +/-0.5	0.067 +/-.020 [1.7] +/-0.5	0.125 [3.2]	0.075 [1.9]	0.226 [5.7]	0.121 [3.0]	MINIATURE ONLY	0.064 [29.0]
TM1S6		#6 (M3) SCREW							0.080 [2.0]	0.277 [7.0]	0.146 [3.7]		0.057 [26.0]

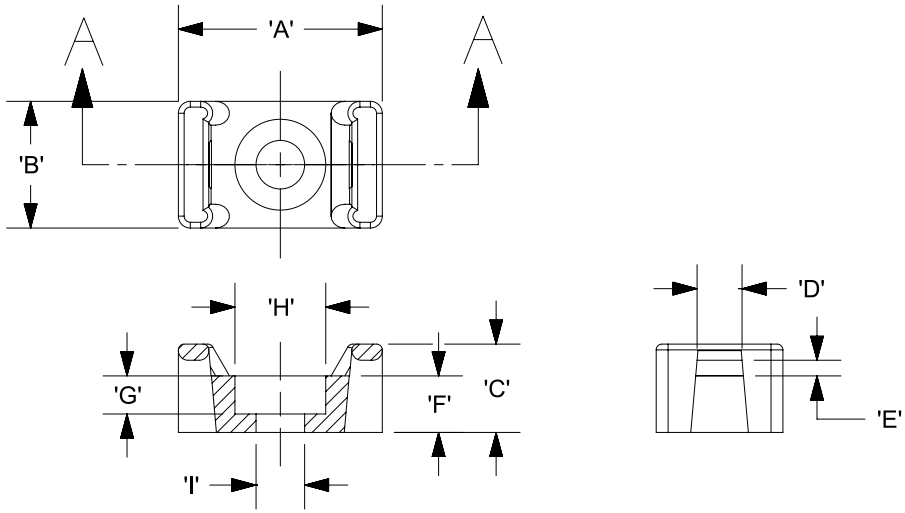

SECTION A - A

MATERIAL SUFFIX	MATERIAL
NONE	NYLON 6/6
-0	WEATHER RESISTANT NYLON
-30	HEAT STABILIZED NYLON
-69	FLAME RETARDANT NYLON

NOTES;

*1. SEE CURRENT PRICE SHEET FOR PART NUMBER SUFFIX DESIGNATION FOR PACKAGE SIZE.

*2. HOLE DIMENSIONS SHOULD ACCOMENDATE SPECIFIED RECOMMENDED FASTENER.

9 3. BAG MAY CONTAIN EXTRA PIECES TO COMPENSATE FOR VARIANCE IN THE PACKAGING PROCESS. PANDUIT ASSURES MINIMUM PIECE COUNT AS STATED ON THE BAG.

REV	DATE	BY	CHK	APR	DESCRIPTION	ECN
9	12/1/2020	RVU	RMHI	JADE	ADDED NOTE 3. UPDATED TEMPLATE DWG.	GAECN05823
8	6/8/05	TMSA			CHANGED RECOMMENDED FASTENER FROM M3.0 TO M2.5.	GB0239CN

TITLE

TM1S TIE MOUNT

CUSTOMER DRAWING

ITEM REVISION NAME: G03597JV/02

DATASET FILE NAME: G03597JV_GB0239CN_09/01B

UNLESS OTHERWISE SPECIFIED, DIMENSIONAL TOLERANCES ARE: IN [mm]

.X ± .05 [1.3] .XXX ± .010 [.25]

.XX ± .02 [0.5] ANGLES ± 5 °

THIRD ANGLE PROJECTION

MATERIAL: SEE TABLE

DRAWING NUMBER: GB0239CN

DRAWN BY	DATE	CHK	SCALE	SHT 1 OF 1	SIZE
GDH	02/20/95	JADE	NONE		A

D10100DA/20