THIS COPY IS PROVIDED ON A RESTRICTED BASIS AND IS NOT TO BE USED IN ANY WAY DETRIMENTAL TO THE INTERESTS OF PANDUIT CORP.

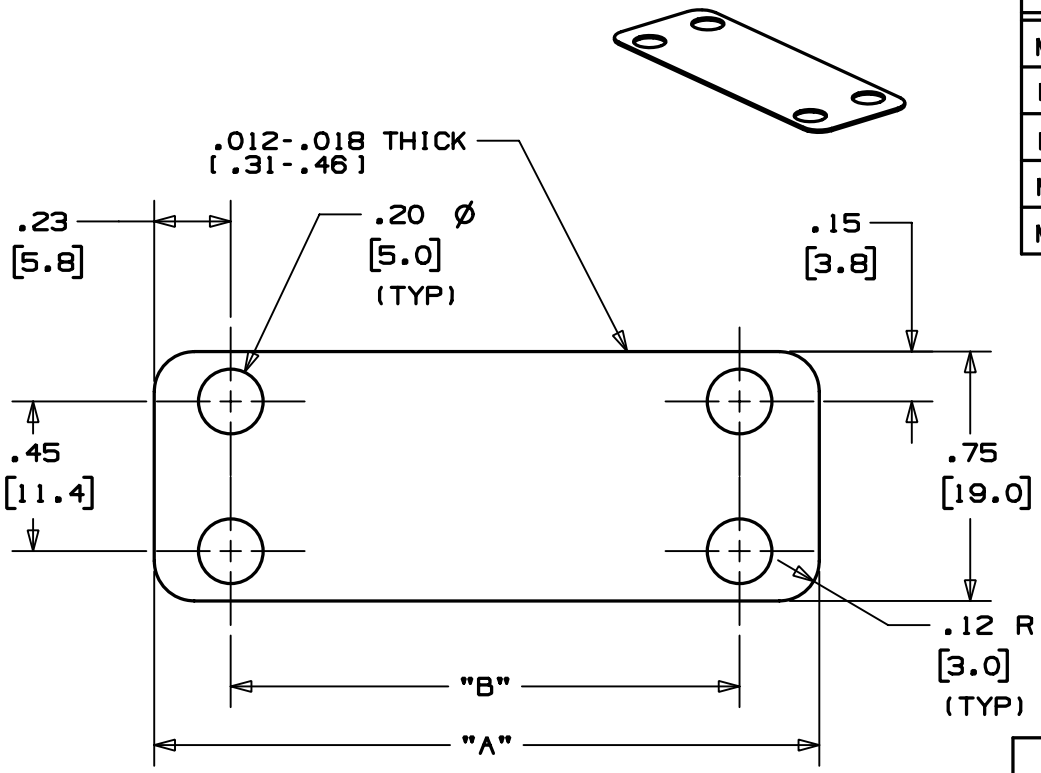

PANDUIT PART NO. *	A ±.030 ±(.762)	B ±.030 ±(.762)	WEIGHT lbs. /100 (g) / pcs.
MP150-0	1.50 (38.1)	1.03 (26.2)	.07 (30)
MP175-0	1.75 (44.4)	1.28 (32.5)	.08 (36)
MP200-0	2.00 (50.8)	1.53 (38.9)	.09 (30)
MP250-0	2.50 (63.5)	2.03 (51.6)	.12 (55)
MP350-0	3.50 (88.9)	3.03 (77.7)	.16 (75)

NOTES:
*1. SEE CURRENT PRICE SHEET FOR PART NUMBER SUFFIX DESIGNATION FOR PACKAGE SIZE.
2. USE WITH ANY OF THESE TIES:
M=MINIATURE
I=INTERMEDIATE
S=STANDARD

DIMENSIONS IN BRACKETS ARE METRIC [mm]

CAD FILENAME/LAYERS G00239GL_PB_MRKRPLTE_00

PANDUIT CORP. TINLEY PARK, ILLINOIS

WEATHER RESISTANT
IDENTIFICATION MARKER PLATE

UNLESS OTHERWISE SPECIFIED, DIMENSIONAL TOLERANCES ARE:
(.X) ±0.05 [1.3] (.XXX) ±0.010 [0.25]
(.XX) ±0.02 [0.5] ANGLES ± 5°

UNLESS OTHERWISE SPECIFIED, ALL DIMENSIONS ARE GIVEN IN INCHES, THIRD ANGLE PROJECTION.

DRAWN BY JAD
DATE 1/6/2000
CHK'D

MAT'L: WEATHER RESISTANT BLACK NYLON

SCALE NONE
DRAWING NO. GB0239GL
SIZE A

REV	DATE	BY	CHK	DESCRIPTION	ECN - R	CUST	SUP
R	1-6-00	JAD		INITIAL RELEASE, REPLACES SS-16926 REV. 2	GB0239GL R		