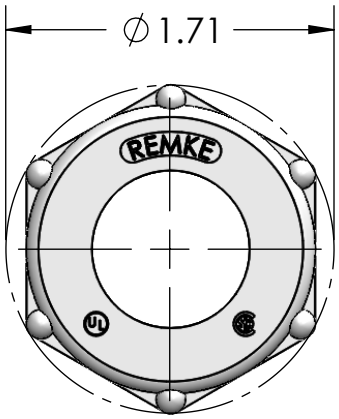

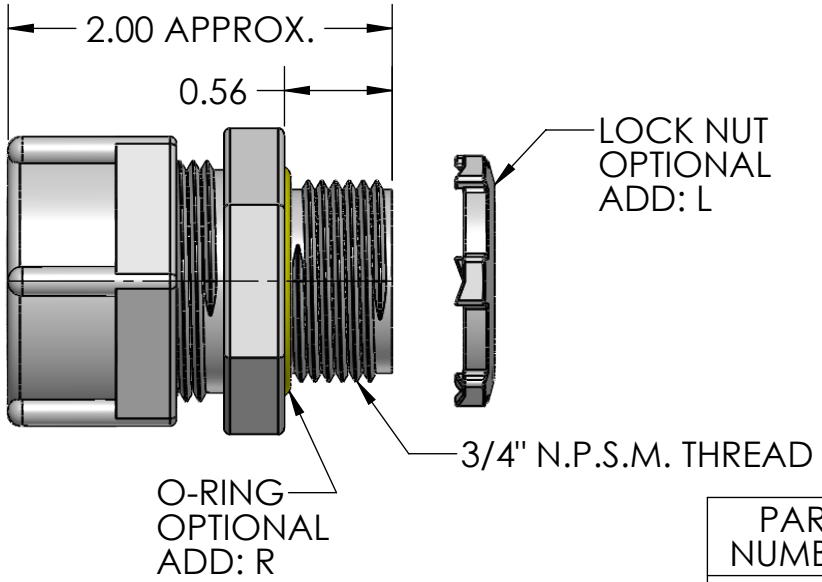

PART NUMBER	SEALING RANGE	BODY BORE
RSP-203	.125 - .188	.760
RSP-204	.188 - .250	.760
RSP-205	.250 - .312	.760
RSP-206	.312 - .375	.760
RSP-207	.375 - .437	.760
RSP-208	.438 - .500	.760
RSP-209	.500 - .562	.760
RSP-210	.500 - .625	.760
RSP-211	.562 - .688	.760
RSP-212	.625 - .750	.760
RSP-213	.688 - .812	.760

ITEM NO.	PART NUMBER	DESCRIPTION	MATERIAL	QTY.
1	RSP-200-B	BODY	NYLON 6/6	1
2	RSP-200-N	NUT	NYLON 6/6	1
3	SRB-213	BUSHING	NEOPRENE	1
4	RSP-200-WB	WASHER	NYLON 6/6	1
5	SOR-2	O-RING	BUNA-N	1
6	LN-75	LOCK NUT	ADD L, C.R.S. ZINC PLATED	1

REV.	DATE	CHANGE
A	5/30/13	DRAWING RELEASED

UNLESS OTHERWISE SPECIFIED:
DIMENSIONS ARE IN INCHES
TOLERANCES:
FRACTIONAL ± 1/64
ANGULAR: MACH ±1° BEND ±1°
ONE PLACE DECIMAL ±.015
TWO PLACE DECIMAL ±.010
THREE PLACE DECIMAL ±.005

INTERPRET GEOMETRIC TOLERANCING PER:

MATERIAL PLASTIC

FINISH

DO NOT SCALE DRAWING

	NAME	DATE
DRAWN	JCN	5/13
CHECKED		
ENG APPR.		
MFG APPR.		
Q.A.		

PROPRIETARY AND CONFIDENTIAL

THE INFORMATION CONTAINED IN THIS DRAWING IS THE SOLE PROPERTY OF REMKE INDUSTRIES. ANY REPRODUCTION IN PART OR AS A WHOLE WITHOUT THE WRITTEN PERMISSION OF REMKE INDUSTIRES IS PROHIBITED.

REMKE
REMKE INDUSTRIES
310 CHADDICK DR, WHEELING, IL. 60090

TITLE:
RSP-200 SERIES

SIZE A
DWG. NO. RSP-200 ASSEMBLY

SCALE: 1:1
SHEET 1 OF 1

5 4 3 2 1