FEMALE END VIEW

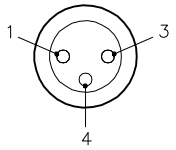

1 = BROWN
3 = BLUE
4 = BLACK

SPECIFICATIONS

CONTACT CARRIER MATERIAL	NYLON or TPU
MOLDED HEAD MATERIAL/COLOR	TPU/BLACK
CONTACT MATERIAL/PLATING	BRASS/GOLD
COUPLING NUT MATERIAL/PLATING	BRASS/NICKEL
RATED CURRENT [A]	4.0 A
RATED VOLTAGE [V]	125 VAC/VDC
OUTER JACKET MATERIAL/COLOR	TPU/BLACK
CONDUCTOR INSULATION MATERIAL	PVC
NUMBER OF CONDUCTORS [AWG]	3x24 AWG
TEMPERATURE RATING	−40˚C TO +90˚C (−40˚F TO +194˚F)
PROTECTION CLASS	MEETS NEMA 1,3,4,6P AND IEC IP67

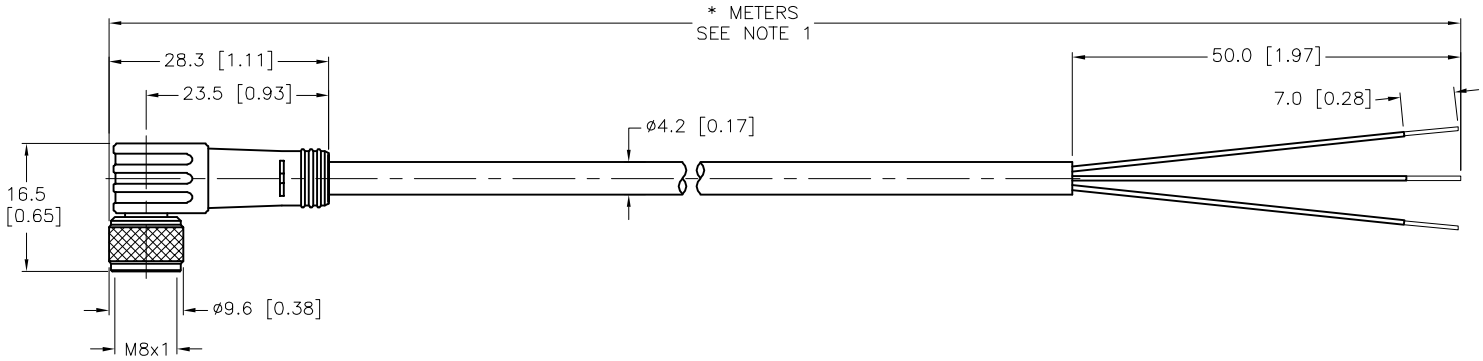

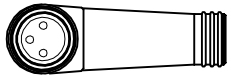

CABLE LENGTH	TOLERANCE *
ALL LENGTHS	+ 4% (OR 50mm) OF LENGTH − 0% (OR 0mm) OF LENGTH WHICHEVER IS GREATER
STRIP LENGTH	**TOLERANCE ***
0−7mm	±0.5mm
8−29mm	±1.0mm
30−49mm	±2.0mm
50−69mm	±3.0mm
70−100mm	±4.0mm
OVER 100mm	±5.0mm
* UNLESS OTHERWISE SPECIFIED	

SOURCE DRAWING - FOR REFERENCE ONLY

NOTES:

1. "*" INDICATES CABLE LENGTH IN METERS. CONTACT TURCK TO ORDER SPECIFIC LENGTHS.
2. "/S90" INDICATES THERMOPLASTIC POLYURETHANE (TPU) CABLE JACKET.
3. "/S771" DESIGNATES BLACK MOLDED PLUG BODY.
4. "/SV" DESIGNATES SPECIAL PACKAGING FOR VENDING MACHINES.

REV	DESCRIPTION	BY	DATE	ECO NO.
B	UPDATE CABLE OD	CK	08/10/11	35981

RELATED DOCUMENTS
1.
2.
3.
4.

3RD ANGLE PROJECTION

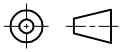

THIS DRAWING IS CONFIDENTIAL AND THE PROPERTY OF TURCK INC. USE OF THIS DOCUMENT WITHOUT WRITTEN PERMISSION IS PROHIBITED.

TURCK
3000 CAMPUS DRIVE
MINNEAPOLIS, MN 55441
1−800−544−7769
(763) 553−7300
(763) 553−0708 fax
www.turck.us

MATERIAL
SEE SPECIFICATIONS

FINISH
SEE SPECIFICATIONS

ALL DIMENSIONS DISPLAYED ON THIS DRAWING ARE FOR REFERENCE ONLY

CONTACT TURCK FOR MORE INFORMATION

DRFT CK
DATE 04/14/11
APVD
SCALE 1=1.0

UNIT OF MEASUREMENT
MILLIMETER [INCH]
DO NOT SCALE THIS DRAWING

DESCRIPTION
PKW 3M−*/S90/S771/SV

IDENTIFICATION NO.

REV
B

FILE: 777017085

SHEET 1 OF 1